ADX5D

Portable Receiver

Shure ADX5D manual. How to use the portable dual-channel receiver, ShowLink information, troubleshooting, specifications, and more.
Version: 2.3 (2025-H)

Table of Contents

ADX5D Portable Receiver 4

ADX5D Portable Slot-In Receiver 4

Features 4

Optional Accessories 4

Hardware Callouts 6

Hardware Setup 9

Antenna Attachment 10

Rear Panel Kits 11

Attaching the Backplate 11

TA3 Backplate 11

DB15 Backplate 14

DB25 Backplate 16

Scan for Available Frequencies 17

Group Scan 18

Channel Scan 18

Spectrum Scan 18

IR Sync 18

Home Screen 19

Icons 19

Menus and Configuration 20

Shortcut Menu 20

Device Configuration Menu 20

Channel Menu 24

ShowLink® Remote Control 27

ADX5D ShowLink® Modes 28

ShowLink® Test 30

Assigning Transmitters to Transmitter Slots 30

Party Dial 31

Custom Groups 32

Transmission Modes 32

Selecting a Transmission Mode 33

Frequency Diversity 33

FD-S Advanced Settings 33

Interference Management 34

Setting the Detection Mode 34

Unregistered Transmitter Action 34

Frequency Server 34

3.5 mm. Output Settings 35

Firmware 35

Troubleshooting 36

Notifications 37

Device Notifications 37

Channel Notifications 38

Contact Customer Support 39

Receiver Frequency Bands 39

Specifications 40

Dimensions 43

Pinout Diagrams 43

DB15 44

DB25 44

TA3M 45

Hirose 45

IMPORTANT SAFETY INSTRUCTIONS 45

Certifications **46** Information to the user 48

ADX5D
Portable Receiver

ADX5D Portable Slot-In Receiver

The Axient® Digital ADX5D is a portable, dual-channel, digital wireless receiver.

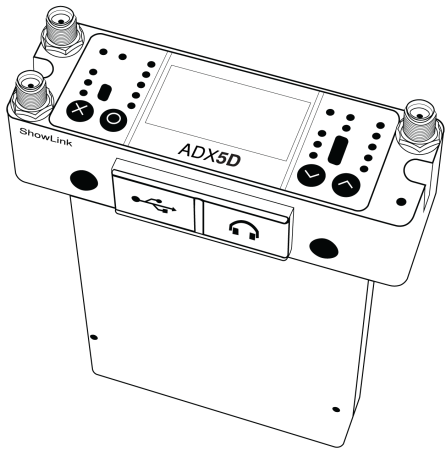

Features

- Wide tuning range up to 184 MHz (varies by region)
- High spectral efficiency due to advanced digital modulation scheme offers more wireless channels in available RF space
- True digital diversity reception per channel for drop-out resistance and excellent range
- Low latency, down to 2 milliseconds
- Networked control with Wireless Workbench software and Wireless Workbench Mobile app
- ShowLink® direct mode allows remote control of Axient® Digital transmitters without the need of additional equipment*
- Aux 3.5mm audio output provides connection to headphones or to a balanced line level input
- Three backplate connector options support various applications and connector types

* See Country-Specific Functionality Restrictions.

Optional Accessories

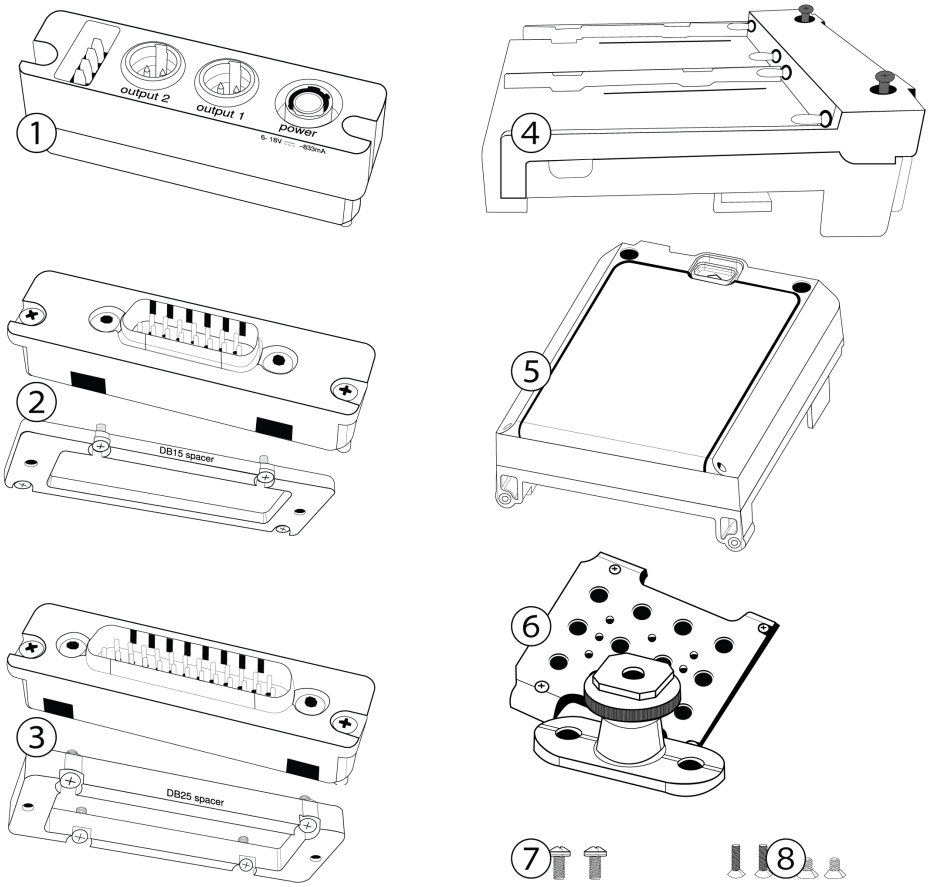

① ADX5BP-TA3

Standalone backplate

② ADX5BP-DB15

DB15 backplate and spacer plate

③ ADX5BP-DB25

DB25 backplate and spacer plate

④ ADX5BS-L

L-type battery sled attachment

⑤ ADX5BS-AA

AA battery sled attachment

⑥ ADX5-MOUNT

Mounting plate with cold shoe

⑦ M3 screws (x2)

To attach cold shoe to mounting plate

⑧ ¼-20 screws (x2) and M2.5 screws (x2)

To attach mounting plate to third-party mounts

Hardware Callouts

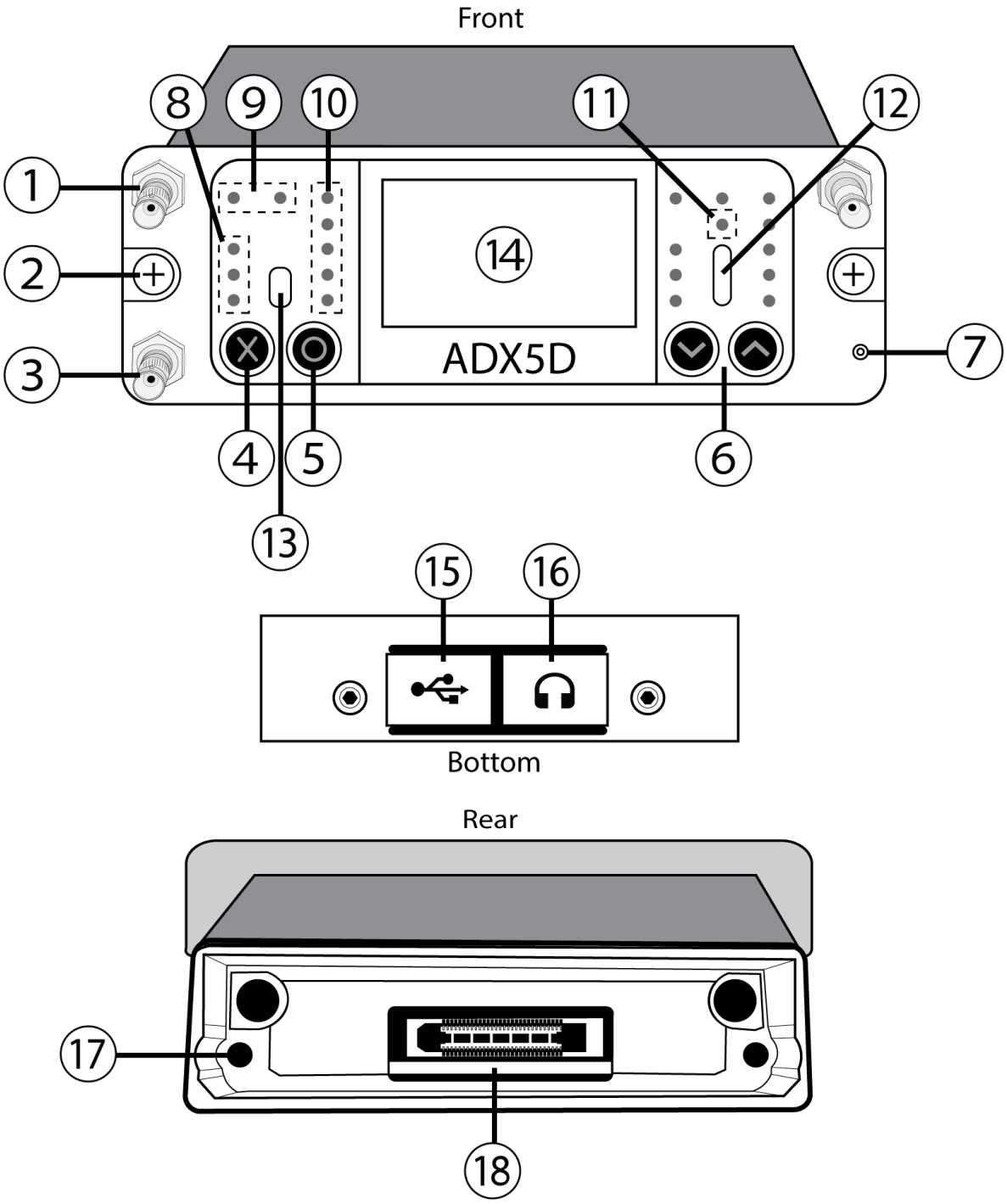

① SMA inputs from Antenna A and Antenna B

RF connection for Antenna A and Antenna B.

② Main mounting screws (M2.5x0.45)

Captive screws for mounting the receiver to other hardware.

③ SMA input from ShowLink® antenna

RF connection for networking via ShowLink.

Note: See Country-Specific Functionality Restrictions.

④ "Exit" (X) button

Push to return to the previous menu screen, hold to power the unit on or off.

⑤ "Enter" (O) button

Press to enter menu screens and confirm menu changes.

⑥ Control buttons

Use to navigate through parameter menus and to change settings.

⑦ Power LED

- Green = Unit is powered on
- Red = Unit is powered off
- Off = Unit is not connected to a valid power supply

⑧ Audio level LEDs

Red, yellow, and green LEDs indicate average and peak audio levels. For more specific readings, use the in-display audio monitor.

⑨ Antenna status LEDs

Indicates status for both antennas:

- Blue = Normal RF signal between the receiver and transmitter
- Red = Interference detected
- Off = No RF connection between the receiver and transmitter

Note: *The receiver will not output audio unless one blue LED is illuminated.*

⑩ Channel quality LEDs

Displays signal-to-noise ratio of RF signal. When the RF signal is strong with a low level of noise, all five LEDs are lit; low levels of channel quality provide an early warning of potential problems, allowing you to switch to a clear frequency.

⑪ IR Sync LED

Indicates the receiver's IR port is aligned with a transmitter.

⑫ Infrared (IR) port

Align with a compatible transmitter's IR port during an IR Sync for automated tuning and setup.

⑬ Ambient Light Sensor

Automatically detects external lighting conditions.

⑭ Display

View menu screens and settings. Press any control button to activate the display.

⑮ USB-C port

Connect to a computer to update firmware.

Note: *Device cannot be powered by USB.*

⑯ 3.5mm output port

User-assignable audio output.

⑰ Backplate screw holes

Internally-threaded screw holes for securing interchangeable backplates.

⑱ Rear panel connector

Transfers data and power from compatible backplates.

Hardware Setup

Antenna Attachment

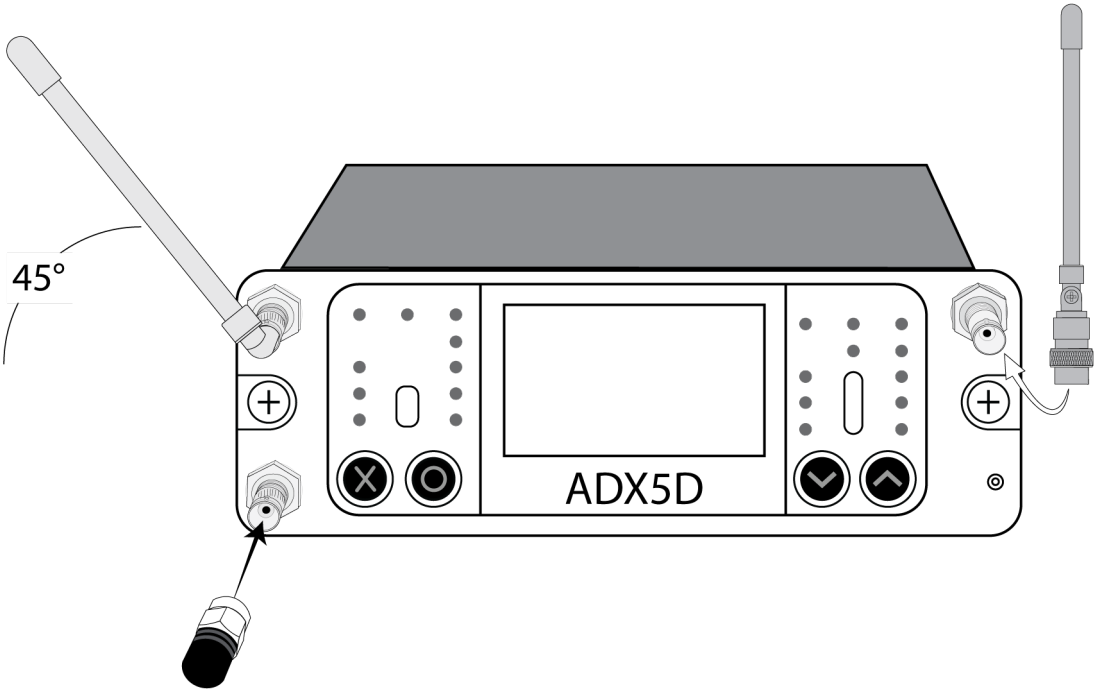

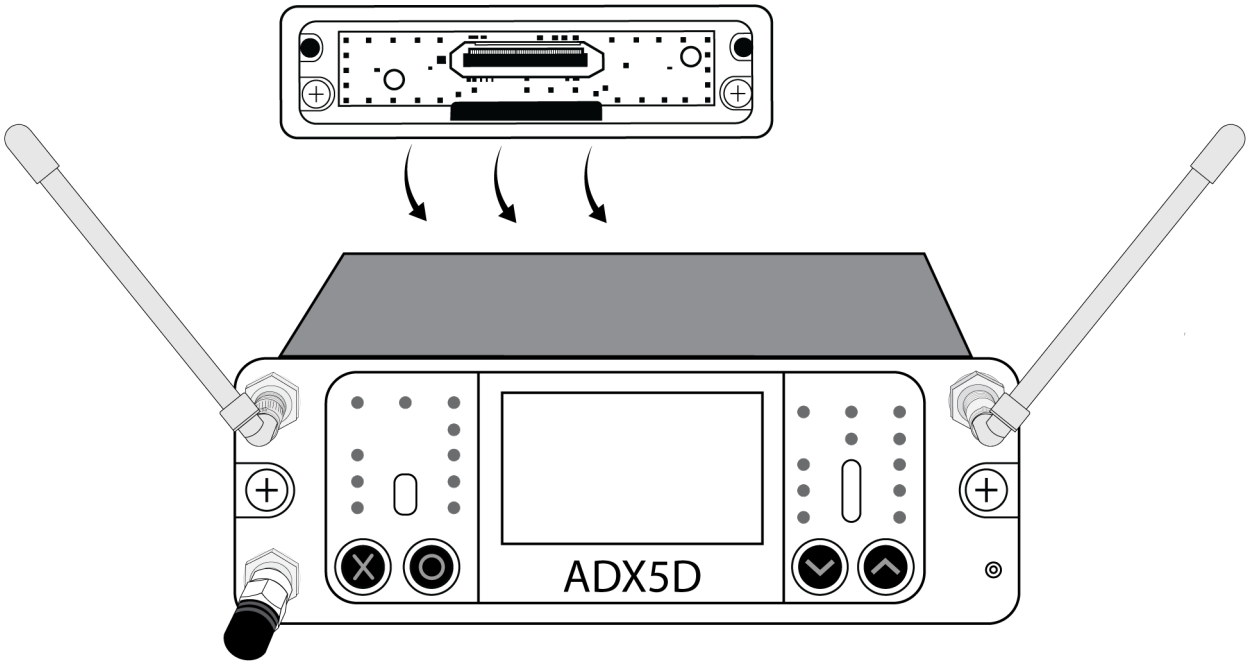

Rear Panel Kits

One of the major advantages of the slot-in receiver form factor is that they can be configured for multiple applications, including insertion into a camera or multi-coupler device, or for standalone use where power is provided by a battery distribution system (BDS) or battery sled. The rear panels manage power input, audio output, and data transfer between mating devices (e.g. cameras, multi-couplers, etc.). The spacer plates facilitate mounting in cameras, SuperSlot™ and UniSlot® multi-couplers, and audio bag organizer plates, as each of these devices have different dimensions and clearances for slot-in receivers.

Attaching the Backplate

Align the captive Phillips screws with the threaded holes on the back of the ADX5D receiver and slide the backplate into place. Tighten screws to ensure a solid connection.

TIP: Backplates only align one way. You don't need to force it into place.

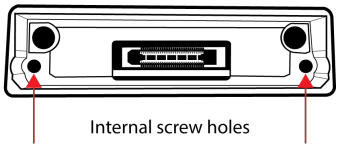

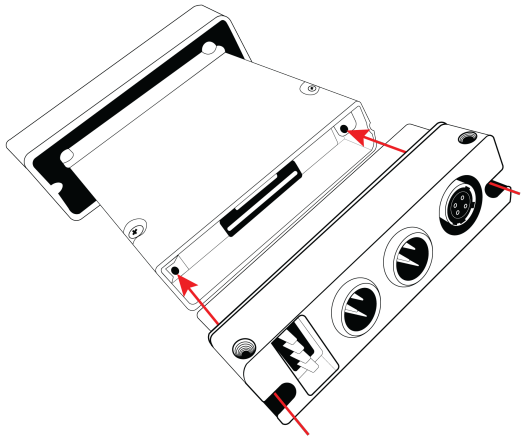

TA3 Backplate

The TA3 Backplate for ADX5D is designed to accommodate power input from an external source, audio output for the receiver, and optional interfacing with compatible battery sleds. The panel includes a 4-pin connector for mating with the battery sled, two TA3 (mini 3-pin XLR) audio output connectors, a 4-pin locking Hirose power input connector, and captive Phillips-head screws to mount/unmount the rear panel.

When connected, output 1 can be configured for analog or AES3 output in the device menu. Analog output 2 is disabled when AES3 is selected.

Since the receiver doesn't need to mate with an external device while being used with the standalone rear panel, a spacer plate is not required or included with the rear panel.

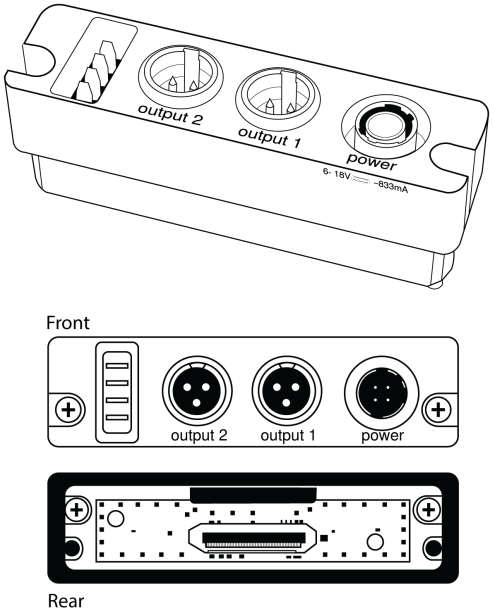

Connectors are (from left to right): 4-pin battery sled power input, TA3 audio outputs 1 and 2, and Hirose 4-pin power input.

Connecting a Power Supply

Connect a compatible 6-18V power supply to the power input. When multiple power sources are connected, the device will draw power from the Hirose connector, with the battery sled serving as backup. This allows for seamless switching between power supply and battery operations.

CAUTION: Always attach backplate to receiver before connecting power supply.

Note: The power supply does not charge rechargeable batteries.

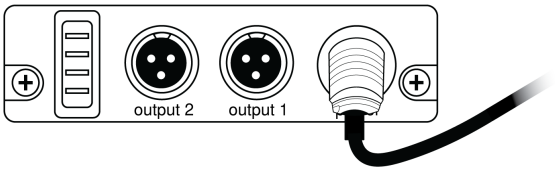

Battery Sleds

ADX5BS-L and ADX5BS-AA battery sleds must be used with the ADX5BP-TA3 standalone rear panel, as this panel includes the 4-pin connector required for the two components to mate and pass power. The battery sled is then secured to the receiver using two screws on the rear of the sled, which ensures that the sled cannot fall off or be removed, and two screws from the front panel to stabilize the sled while on the receiver.

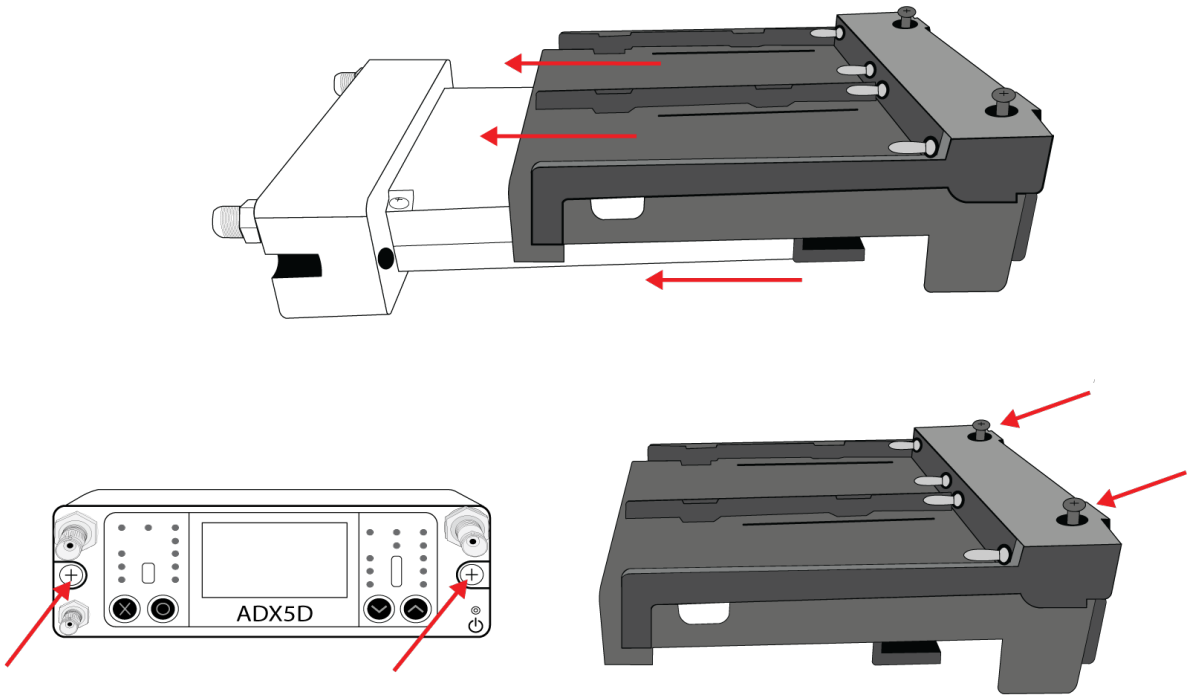

ADX5BS-L

The ADX5D can be powered by a single L-type battery; when two batteries are installed, one can be replaced without interrupting operation. Battery runtime changes depending on the number, type, and capacity of the batteries used.

Insert the battery so that the contact points on the front face connect with the contacts at the rear of the battery sled bay until the latch moves into place. To remove the battery, push the latch down and pull the battery back and up.

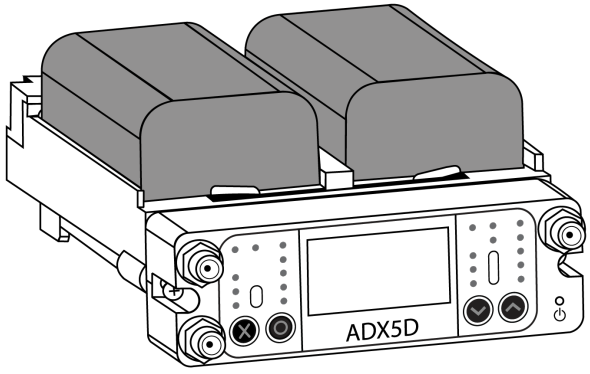

ADX5BS-AA

The ADX5D can be powered by 6 AA batteries. Ensure all batteries are properly inserted as shown before powering on the device. Always power off the device fully before removing batteries.

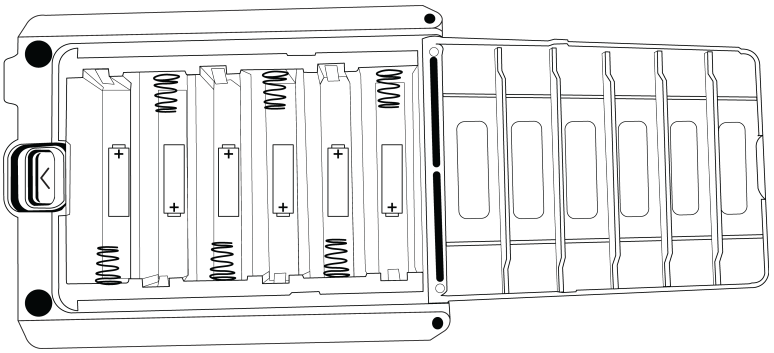

AA Battery Runtimes

Battery Type	Runtime
Alkaline	>1:30
NiMH	>4:00
Li Primary	>6:00

Note: Different operating and storage conditions can shorten or lengthen battery life.

DB15 Backplate

DB15 backplates are available for devices with 15-pin connectors, such as Sony video cameras. If only one audio channel is available, the 3.5mm connector on the bottom of the front plate can be used to output audio from channel 1, channel 2, channel 1+2 stereo, or channel 1+2 summed mono.

Note: See Country-Specific Functionality Restrictions.

The DB15 rear panel kit for ADX5D includes:

- A DB15 rear panel, with captive Phillips-head screws that make it easy to mount/unmount the rear panel without losing screws
- A DB15 spacer plate

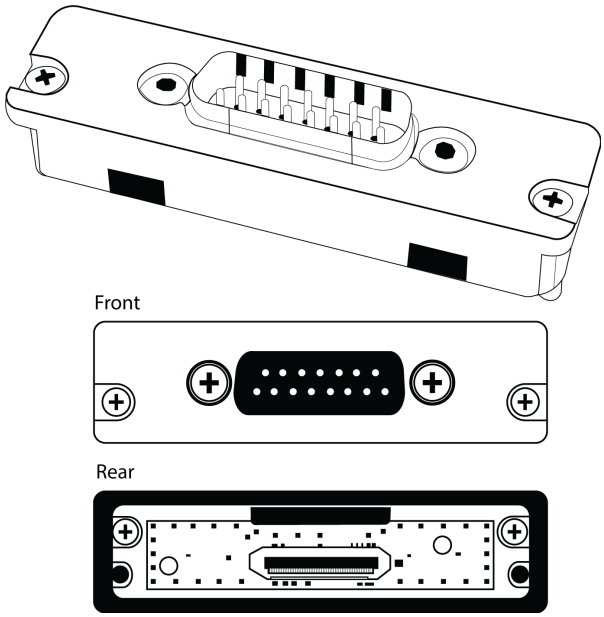

Connecting to External Hardware

Attach the backplate and slot the ADX5D receiver into a compatible DB15 video camera. If needed, attach the included spacer plate to provide a proper fit.

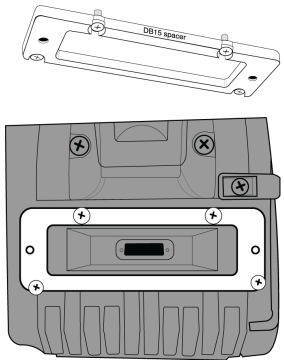

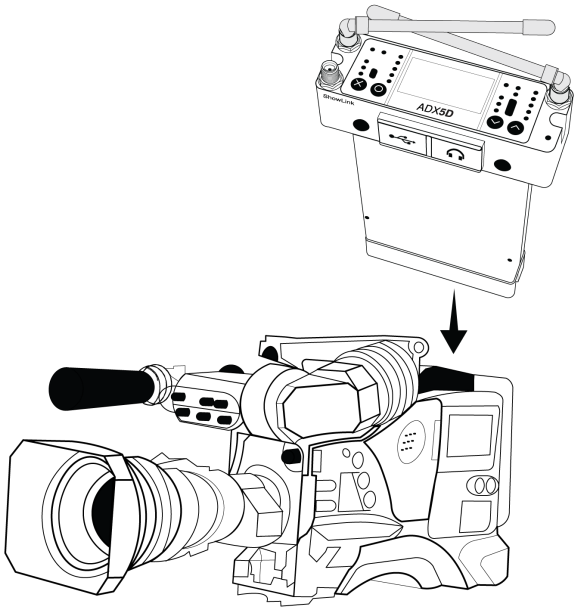

DB25 Backplate

DB25 rear panels utilize a 25-pin D-Sub connector to transmit audio, video, data, and power. This connector type is commonly used on devices that require multiple interfacing paths in a small form factor, including SuperSlot™/UniSlot® devices.

Note: See Country-Specific Functionality Restrictions.

The DB25 rear panel kit for ADX5D includes:

- A DB25 rear panel, with captive Phillips-head screws that make it easy to mount/unmount the rear panel without losing screws
- A DB25 spacer plate

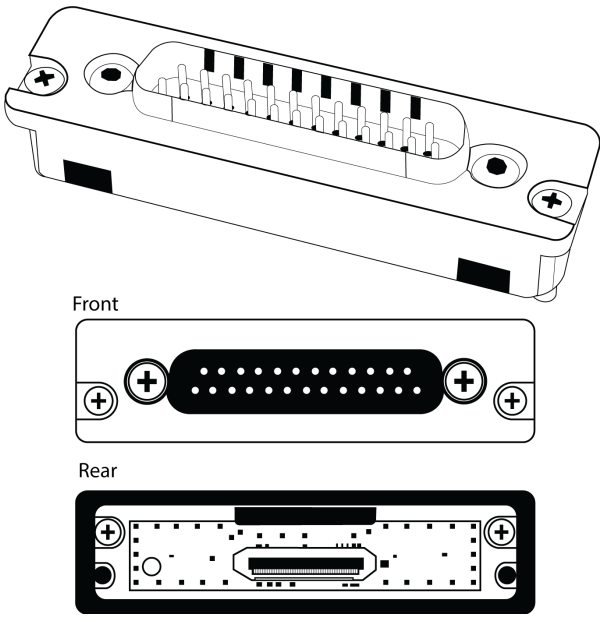

Connecting to External Hardware

Attach the backplate and slot the ADX5D receiver into compatible DB25 equipment, such as a video camera or multi-coupler. If needed, attach the included spacer plate to provide a proper fit.

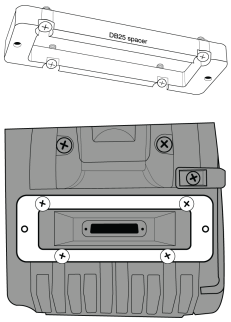

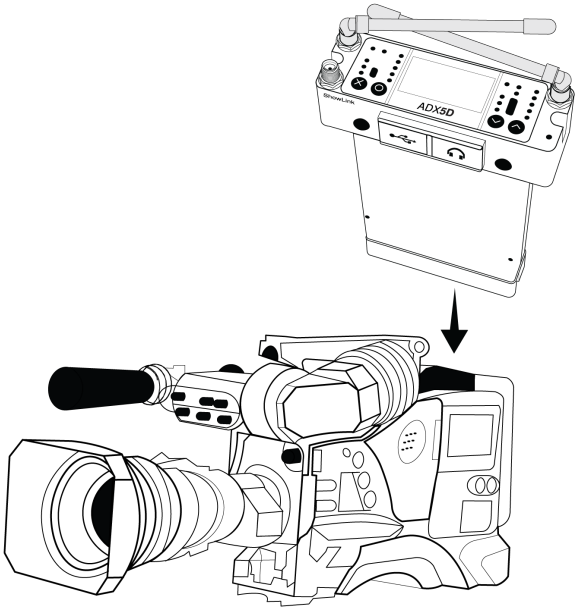

Scan for Available Frequencies

Perform group and channel scans to find the best frequencies for your devices.

What are groups and channels?

To minimize interference, Shure wireless systems organize RF bands into predefined **groups** and **channels**. An individual frequency is a channel. Channels that are unlikely to interfere with each other are compiled into groups.

Note: Because groups are band-dependent, some systems only have one available group. Single-group bands have the same RF performance as those with multiple groups.

Important: Before you begin:

Turn off all transmitters for the systems you are setting up (this prevents them from interfering with the frequency scan).

Turn on potential sources of interference (other wireless systems or devices, computers, large LED panels, effects processors, and so on) so they are operating as they would be during the presentation or performance. The scan will detect and avoid any interference they generate.

Group Scan

Perform a group scan to find the group with the most available frequencies. Available frequencies can be automatically deployed to receiver channels and other networked components.

1. Go to `Channel Menu` > `Group Scan`.
2. Press O to scan the group.
3. When the scan is complete, the number of frequencies found are shown on the display.
4. Press O to assign frequencies to components on the network.
5. To deploy frequencies to your transmitters, perform an IR sync.

Channel Scan

Perform a channel scan to find available frequencies within a group.

1. Go to `Channel Menu` > `Channel Scan`
2. Use the arrow buttons to choose the group you'd like to scan.
3. Choose one of the following options:
   - Find Next: Finds the next available frequency within the group
   - Find Best: Finds the best available frequency based on RSSI
4. Press O to confirm your frequency selection.
5. To deploy frequencies to your transmitters, perform an IR sync.

Spectrum Scan

Scan the full RF spectrum for potential sources of interference, from the receiver or from connected control software. Use the control buttons to move the cursor across the spectrum and view frequency and level information.

- Set Zoom: Zoom in on the cursor point, up to 16x.
- Save: Store the current scan results.
- Recall: Restore the results of the most recently saved scan.
- Rescan: Perform a new scan.

IR Sync

Use IR Sync to form an audio channel between the transmitter and receiver.

Note: The receiver band must match the band of the transmitter.

1. Power on the transmitter.
2. Enter a receiver channel menu.
3. Select Sync.
4. Align the IR windows until the receiver IR sync LED illuminates red. When complete, Success appears. The transmitter and receiver are now tuned to the same frequency.

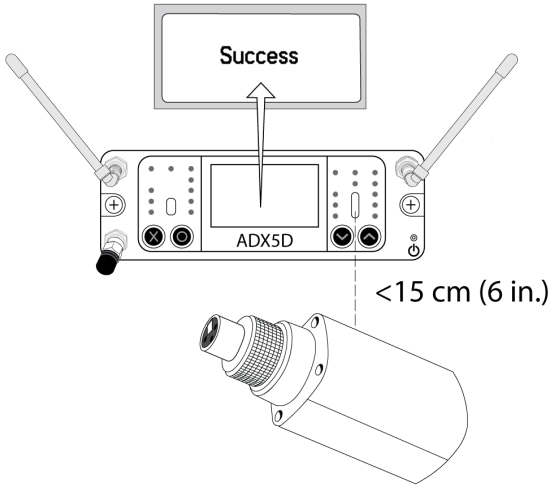

Note:

Any change to the encryption status on the receiver such as enabling/ disabling encryption or requesting a new encryption key, requires a sync to send the settings to the transmitter.

Home Screen

The home screen displays the most critical device and channel properties and statuses. From the main home screen, use the arrow buttons to navigate to the channel home screens. Press O to open the menu selection screen, or hold X to go to the shortcut menu.

Note: To change the information that appears on the device or channel home screens, go to `Device Configuration` > `Display` > `Dev Home Options` or `Ch Home Options`.

Icons

Icon	Description
	Transmitter battery runtime in hours and minutes or bar display
	Displayed when encryption is enabled
	Displayed when controls are locked. Icon will flash if access is attempted to a locked control (power or menu).
	ShowLink® signal strength displays 0 to 5 bars
STD	Indicates standard transmission mode
HD	Indicates high density transmission mode
	Displayed when RF output is muted

Menus and Configuration

The receiver uses a two-tier menu structure to support multiple channels:

- Device configuration menu: Items in this menu affect the overall performance of the receiver and apply to all channels globally.
- Channel menus: Each channel has its own menu allowing for independent channel configuration.

Note: If your receiver features a different menu structure, update to the latest firmware.

Shortcut Menu

To access the shortcut menu, hold the X button. Use the arrow keys to cycle through options, push O to confirm your selection.

Shortcut	Function
Power Off?	Turn off the receiver.
Switch Channels	Quickly switch between channels without changing the selected parameter. **Note:** Only available when the Shortcut menu is launched from within a channel menu.
3.5mm Level	Adjust the 3.5mm output level from -60 to 12 in 1 dB steps.
Home	Open the device home screen.
Menu Lock	Use the locking feature to prevent accidental or unauthorized changes to controls and settings. Use the arrow buttons to change the lock status of the menu.
Rx1 Sync	Perform an IR Sync on Rx1.
Rx2 Sync	Perform an IR sync on Rx 2. **Note:** Not displayed in FD-C mode

Device Configuration Menu

Use the following menu items and parameter settings to configure the receiver at the device level. From the following home screen, press O to see your menu options:

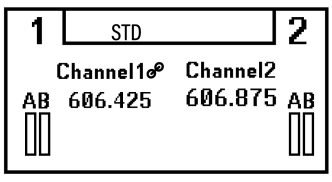

Use the arrows to select the menu of your choice, and press O to open that menu.

As you edit menu values, press O to save changes or press X to cancel without saving.

Device configuration menu map

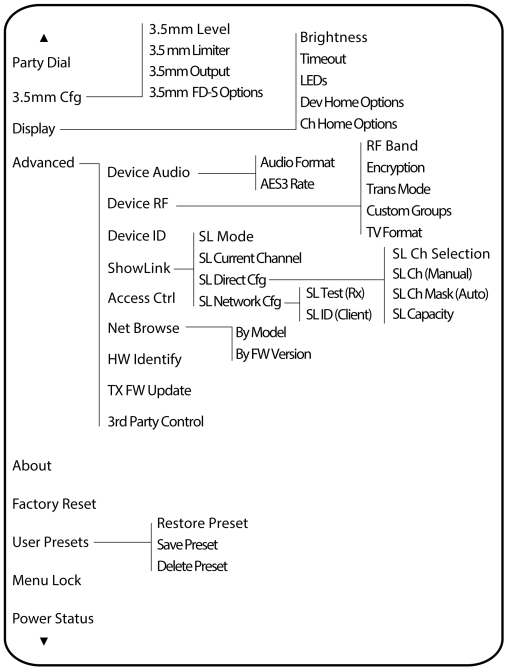

Party Dial

Automatically set up transmitter for Party Dial, if applicable.

Switch between active channels. At-a-glance audio and battery life monitoring.

3.5mm Cfg

3.5mm Level

Adjust the headphone level from -60 to 12 in 1 dB steps.

3.5mm Limiter

Adjust the limiter threshold to prevent overdriving the headphone amp. 0 to -30 dB.

3.5mm Output

Choose an output mode. See 3.5 mm. Output Settings for more details.

3.5mm FD-S Options

When FD-S mode is engaged, select whether the headphone monitoring point is before or after FD-S selection.

Display

Brightness

Adjust the brightness of the display and LEDs. By default, ADX5D uses the ambient light sensor to automatically control the brightness based on the environment.

Note: *Lower brightness settings consume less power.*

Timeout

Offers options to turn off display and front panel illumination after 30 seconds, 1 minute (default), 2 minutes, 3 minutes, or 5 minutes.

LEDs

- Always On (default): All LEDs function normally.
- Always Off: Antenna status, audio, and channel quality LEDs off. Power status and IR alignment LEDs continue to function normally.
- Follow Display: Antenna status, audio, and channel quality LEDs follow the on/off behavior of the OLED display. Power status and IR alignment LEDs continue to function normally.

Dev Home Options

Select a device home screen.

Ch Home Options

Select a channel home screen.

Advanced

Technical configuration options.

Device Audio

Audio Format

Choose analog or AES3 audio format.

AES3 Rate

Configure sample rate of AES3 output.

Device RF

RF Band

Select the tuning band for the receiver. For proper operation, this should match the band of your transmitters.

Encryption

The receiver features Advanced Encryption Standard (AES-256) to ensure that only the receiver that is keyed to the transmitter can monitor the audio content. Use the menu buttons to select whether to encrypt the audio content and perform an IR sync to enable or disable the encryption.

***Note**: The encryption key icon ( ) will appear on the display of both the receiver and the transmitter when encryption is enabled.*

Trans Mode

Choose between standard and high density transmitter spacing. For more information about each option, see Transmission Modes.

Custom Groups

Configure, edit, or load (copy and distribute to other receivers on the network) custom frequency groups.

TV Format

Adjust TV bandwidth to match regional standards.

Device ID

Assigning custom names or IDs helps with monitoring and organizing when the receiver is part of a large system. Use the arrow buttons to select or edit an ID.

ShowLink®

Note: See Country-Specific Functionality Restrictions.

SL Mode

Select a ShowLink® mode:

- Direct mode: Control parameters of up to 16 registered ADX-series transmitters.
- Network mode: Connect to an existing Shure control network via one or more AD610 access points.

For more information on each ShowLink® mode, see ShowLink® Remote Control.

SL Current Channel

When ShowLink® mode is on, displays the current channel.

SL Direct Config

The following settings apply when the ADX5D is operating in ShowLink® direct mode:

- SL Ch Selection: Choose whether channel selection is automatic or manual.
- SL Ch (Manual): Select a ShowLink® channel.
- SL Ch Mask (Auto): Set automatic channel selection to use or avoid individual channels.
- SL Capacity: Displays the number of devices connected to the ShowLink® network as well as the total capacity of the network.

SL Network Config

The following settings apply when the ADX5D is operating in ShowLink® network mode:

- SL Test (Rx): See the ADX5D <=> Access Point ShowLink® status as the ADX5D moves around the working area. For more information, see ShowLink Test.
- SL Net ID (Client): See and configure the ShowLink® network client ID.

Access Ctrl

View the status of access control (enabled or disabled). If enabled, you can disable access control here. Use Wireless Workbench or other Shure control software to enable access control.

If access control is enabled, control applications such as Wireless Workbench and Wireless Workbench Mobile supply a PIN in order to remotely manage the device. That access control PIN appears in this menu. Set the PIN in Wireless Workbench. Refer to the Wireless Workbench help for details.

Net Browse

Use the network browser utility to view all Shure devices on a network.

By Model

Arranges the network browser results by model name.

By FW Version

Arranges the network browser results by firmware version.

HW Identify

Send a hardware identification message to control applications, like Wireless Workbench, so you can locate your device in the application.

Tx Fw Update

Align transmitter IR window and select to update transmitter firmware.

3rd Party Control

Turn third-party control support On or Off. Reboot to apply changes.

* See Country-Specific Functionality Restrictions.

About

Provides a detailed list of build specifications and vital statistics for the receiver.

Factory Reset

Resets all receiver parameters to factory settings.

All current settings will be cleared during the reset and the receiver will reboot.

User Presets

Presets store all receiver settings to provide a quick way to configure a receiver or switch between several different setups. Up to 4 presets can be stored in receiver memory. Manage and load presets with the control buttons.

- Restore Preset: Load existing preset
- Save Preset: Save the current settings as a preset
- Delete Preset: Delete a preset

Menu Lock

Use the locking feature to prevent accidental or unauthorized changes to controls and settings. Use the arrow buttons to change the lock status of the menu.

Power Status

View the voltage, connected power sources, and active power source for the receiver.

Channel Menu

Use the following menus and parameters to configure the receiver channels. From either of the following home screens, press O to see the corresponding channel's options:

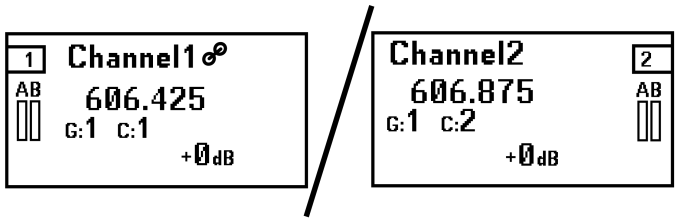

Use the arrows to select the menu of your choice, and press O to open that menu.

As you edit menu values, press O to save changes or press X to cancel without saving.

Channel menu map

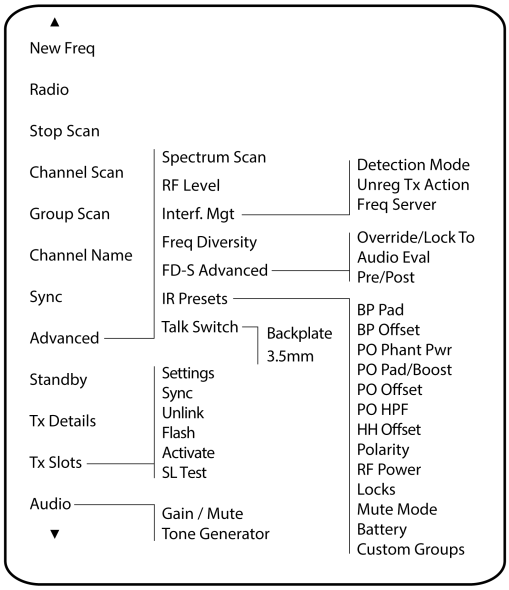

New Freq

Press O to deploy a new frequency when using a spectrum manager as a frequency server.

Note: You won't see this menu option if you don't have a frequency server assigned to the receiver.

Radio

Set a group, channel, and frequency.

Channel Scan

Finds available channels within the selected group:

- Find Next: Selects the nearest available channel
- Find Best: Selects the channels with the best RF noise floor

Group Scan

Scans the selected group to find all available channels.

Channel Name

Assigning unique names to each channel helps with identification and organization when the receiver is part of a large system. Use the arrow keys to assign or edit the channel name.

Sync

Sync a transmitter to the receiver channel. You can also see information about the IR sync process, including when a sync is in progress, whether a sync was successful, and some helpful tips if it failed.

Advanced

Technical configuration options.

Spectrum Scan

Choose to perform a scan or recall a previously saved scan, if one is available.

RF Level

See finer-resolution details about the RF signal strength.

Interference Mgmt

Select interference detection setting for the channel. For more information on each setting, see Interference Detection.

Frequency Diversity

Configure frequency diversity for handheld or bodypack transmitters. Choose between:

- Combining: For use with a single ADX2FD handheld transmitter
- Selection: For use with a pair of AD1 or ADX1 series transmitters

For more information on these settings, see Frequency Diversity.

IR Presets

Configuring IR presets allows all transmitter parameters to be automatically set from the receiver during an IR sync. Use the arrow buttons to select and edit transmitter parameters from the preset list. Select No Change to keep existing settings.

FD-S Advanced

View and adjust the advanced FD-S options. For more information, see FD-S Advanced Settings.

Talk Switch

Set receiver output signal routing options for talk switch control from a transmitter. For more information about using a talk switch with an Axient® Digital transmitter, see the talk switch user guide.

Standby

Put this channel on standby to conserve power when you aren't using it.

Tx Details

Displays build details and vital statistics for the transmitter being received.

Tx Slots

View and configure transmitter properties. Press O to select a slot and see further actions for that slot. For more details about transmitter slots, see Assigning Transmitters to Slots.

-  Indicates a ShowLink® capable transmitter
-  ShowLink® status (ShowLink® transmitters only)
-  RF status. If the icon appears, RF output is on (ShowLink® transmitters only)
-  Battery information (ShowLink® transmitters only)

Sync

Assign a transmitter to the selected slot.

Unlink

Remove a transmitter from the selected slot.

Flash (ShowLink® transmitters only)

Flashes the display of a transmitter linked to the receiver.

Activate (ShowLink® transmitters only)

Press O to send RF mute to all other slots.

SL Test

Press O to see the transmitter's ShowLink® status as the portables move around the working area. For more information, see ShowLink® Test.

Audio

Gain/Mute

You can individually control the gain and audio output in real time for each channel.

- Gain: Adjust the gain in 1dB increments while performing a sound check using typical audio input signal levels and monitor the audio meter LEDs. Reduce the gain if the red LED triggers repeatedly.
- Output: Select On or Mute for the receiver audio output.

Tone Generator

Provides a continuous audio signal tone for testing and troubleshooting. Use the arrow buttons to select a level and frequency for the tone, and set the level to Off to stop the generator.

ShowLink® Remote Control

ShowLink® remote control uses a wireless network connection to enable real-time remote parameter adjustments for select portable Axient® devices. Whether performers are in the middle of a presentation or off stage waiting for their cue, ShowLink® lets you make crucial changes to transmitter settings without interrupting the performers.

Note: See Country-Specific Functionality Restrictions.

ADX5D ShowLink® Modes

To update the ShowLink® mode, go to `Device Configuration` > `ShowLink` > `SL Mode`. ADX5D ShowLink® modes:

- Direct (default)
- Network
- Off

ShowLink® modes: When to use

Mode	Reasons for use	Needed equipment	Example use case
Direct mode	To establish a connection between a single ADX5D and one or more transmitters	ADX5D ShowLink®-enabled transmitters	Crew has a small setup with a few ADX transmitters and no need to use Wireless Workbench or connect to a larger network.
Network mode	To connect ADX5D to an existing network, control the receiver and any linked devices with software (such as Wireless Workbench), and perform frequency mitigation or coordination for any linked devices	ADX5D AD610 ShowLink® access point Optionally, other AD transmitters and receivers	Studio or filming site with a mix of carts and racks of other gear and computers or tablets running control software.
Off mode	You don't need to connect to Wireless Workbench or a larger network and want to extend battery life by turning off non-essential power consuming features or avoid using the 2.4 GHz spectrum	ADX5D	Crew has transmitters that aren't ShowLink® enabled. Users are transmitting audio but not connecting to a larger network or remotely modifying parameters.

Direct Mode

Operate your ADX5D in direct mode to remotely control parameters of registered ADX transmitters without connecting to a larger installation or using control software. When ADX5D is in direct mode, you can control up to 16 Axient® Digital ADX-series transmitters (8 per channel) from a single ADX5D receiver.

Note: An ADX5D in direct mode has no connection to any control applications (e.g. Wireless Workbench or Channels) or devices other than transmitters (e.g. Axient® Digital receivers or AD610 access points).

Automatic or Manual ShowLink® Channel Selection

When your device is in direct mode, the ShowLink® radio will scan the 2.4 GHz spectrum and pick the best channel to operate on. The device will use this channel until the next boot time. You can update your settings to choose a specific channel instead by going to `Device Configuration` > `ShowLink` > `SL Direct Config` > `SL Ch Selection`, selecting Manual, and entering the ShowLink® channel you want the device to operate on.

ShowLink® Channel Mask

If your receiver is in automatic channel selection mode, you can set a ShowLink® channel mask to dictate channels to use or avoid. Go to `Device Configuration` > `ShowLink` > `SL Direct Config` > `SL Ch Mask (Auto)` to select "Use" or "Avoid" for each individual ShowLink® channel.

Network Mode

Use network mode to connect the ADX5D to an existing Shure network and take advantage of the full features of an Axient® Digital receiver, including interference management and frequency coordination via control software such as Wireless Workbench. In network mode, your ShowLink® communications are routed through an AD610 access point, which increases device capacity and ShowLink® range as well as enabling features that depend on connection to a larger network.

Note: The ADX5D is compatible with the AD610 ShowLink® access point.

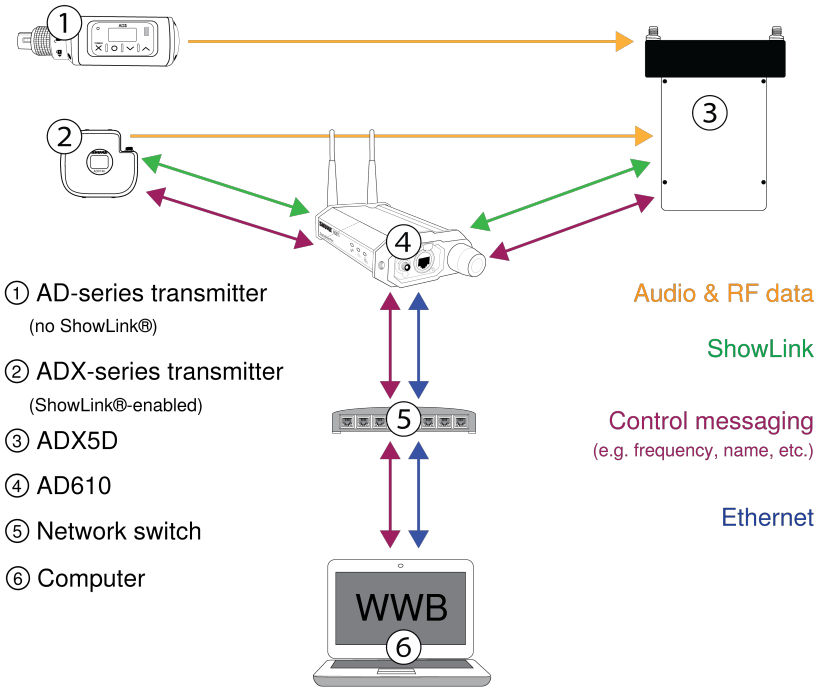

Set Up an AD610 and Choose a Network Host ID

To use the ADX5D in network mode, you must connect an AD610 ShowLink® access point to your network and set a network host ID, which grants access to ADX5Ds with a matching client ID. You can control up to 24 Axient® Digital devices with each AD610.

Note: Update your AD610 to the latest firmware and download the latest version of Wireless Workbench before connecting your ADX5D to the network.

Use the following steps to set up an AD610 ShowLink® access point and choose a network host ID:

1. Connect your AD610 to your network using a Class 1 Power over Ethernet (PoE) port.
2. Right-click the device in Wireless Workbench and open the device properties.
3. Set the ShowLink® network host ID (e.g. A.B.C.D).

Repeat this process for any other AD610s you have on the network that you want to act as a gateway for an ADX5D.

Turn On ADX5D Network Mode and Set the Client ID

An ADX5D in network mode uses a client ID to join networks with an AD610 that has a matching host ID. Once you have an AD610 on your network and a network host ID chosen, set your ADX5D to network mode and set the client ID to match the host ID.

Note: You must be using network mode in order to control this device with Wireless Workbench.

To turn on network mode and set the client ID:

1. In the ADX5D Device Configuration menu, go to `ShowLink` > `SL Mode` and select network mode.
2. Choose the client ID (e.g. A.B.C.D) that matches with your AD610.
3. The ADX5D reboots to apply the new settings.

If the ADX5D is already operating in network mode, go to `Device Cfg` > `ShowLink` > `SL Network Cfg` > `SL Net ID (Client)` and choose the client ID that matches the AD610. The ADX5D reboots to apply the new setting.

ShowLink® Test

Perform a ShowLink® test to find the boundaries of the ShowLink® coverage area between linked devices. When a ShowLink® test is activated, a five-bar display indicating the link quality is shown on the screen. As the devices are moved apart, the number of bars will decrease. ShowLink® control is maintained as long as 1 bar is displayed.

If the device is beyond the coverage range, ShowLink® control is not possible. However, the audio signal will not be affected or interrupted as long as the receiver is within range of the RF signal.

To improve coverage, adjust the location of your devices or place additional access points to extend coverage.

Tip: During a ShowLink® test, press O to drop a marker in Wireless Workbench.

Test coverage of linked transmitters

Perform a ShowLink® test from the Tx Slots menu to plot the status of a linked transmitter's ShowLink® coverage. When your device is in direct mode, this function measures the coverage between your transmitter and the ADX5D; when your device is in network mode, this function measures the coverage between your transmitter and the AD610 it is associated with.

1. Go to the channel menu and select `Tx Slots` > `SL Test`.
2. Position your equipment where you expect it to be when in use.
3. On the receiver, press the O button to start the test.
4. Walk the transmitter around the coverage area. Monitor the number of bars displayed and the state of the ShowLink® icon. Coverage boundaries are indicated by 0 bars displayed or the ShowLink® icon is empty.
5. Press X to exit the ShowLink® test.

Test coverage between AD610 and receiver (network mode only)

To test ShowLink® coverage between an ADX5D in network mode and an AD610 access point:

1. From the Device Configuration menu, navigate to SL Test.
2. Position the AD610 where you expect it to be when in use.
3. On the receiver, press the O button to start the test.
4. Walk the receiver around the coverage area. Monitor the number of bars displayed and the state of the ShowLink® icon. Coverage boundaries are indicated by 0 bars displayed or the ShowLink® icon is empty.
5. Press X to exit the ShowLink® test.

Assigning Transmitters to Transmitter Slots

Each receiver channel contains 8 transmitter slots to control the RF signals passed by the receiver. Transmitters can be assigned to the channel slots or "registered" with the receiver.

For added protection from interference, the receiver will issue a warning or block signals from any transmitters that aren't registered.

To assign a transmitter to a receiver channel:

1. From the Channel menu, go to Tx Slots.
2. Use the arrow buttons to scroll to an available transmitter slot. If the slot is occupied, syncing will overwrite the existing transmitter.
3. Use the arrow buttons to select Sync and press O.

When the sync is complete, the transmitter will be assigned to the slot. The transmitter will remain assigned to the slot until it is unlinked. To remove a transmitter from a slot, use the arrow buttons to select the slot. Then, use the arrow buttons to select Unlink and press O.

Party Dial

Use party dial to quickly switch between active transmitters from a single menu. In party dial, 2 transmitters can be live at any time, and you can switch between channel IDs without having to confirm the change.

Party dial limits your available frequencies to those in a single group. Before entering party dial, you must select a group for your transmitters. You can perform a group scan or create a custom group to define frequencies for each transmitter.

To open party dial, go to `Device Cfg` > `Party Dial`. Note that entering party dial will set the following on your receiver:

- Encryption turns off
- Frequency diversity turns off
- Unregistered transmitter action is allowed
- All transmitter slots are unlinked

These changes persist if you exit party dial.

Navigating in party dial

Each device channel can receive audio from 1 transmitter at a time. Press the arrow keys to change the selected channel ID. Changes are applied immediately, and device information populates shortly thereafter. Press Enter to switch between receiver channel 1 and receiver channel 2.

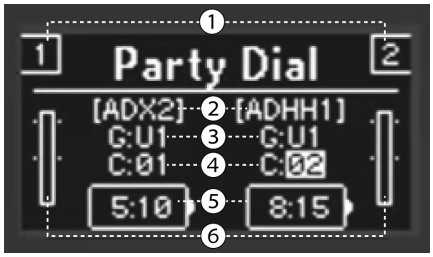

① Receiver channel indicator

1 or 2. Press Enter to switch to the other channel

② Device ID for selected transmitter

Quickly identifies each connected device

③ Group ID

Must be set outside of party dial

④ Channel ID

Switch between channel IDs using the arrow keys

⑤ Battery time remaining

For the selected transmitter

⑥ Audio meter

For more specific readings, use the in-display audio monitor.

Custom Groups

In party dial, you can quickly move between all available RF channels in a selected group. To limit that group to a specific set of channel IDs, you can pre-select frequencies for your transmitters and assign them to a custom group.

Note: Party dial does not necessarily have to employ custom groups. You can use pre-programmed groups, but be aware that there may be extra channel IDs in that pre-programmed group. If there are extra channel IDs in your group, you will have to scroll past them when in party dial to reach the channel IDs assigned to your transmitters.

Set Up Custom Groups in Wireless Workbench

Use the coordination tools in Wireless Workbench determine the best frequencies for your needs and assign those frequencies to a custom group.

1. Set up your ADX5D to sync custom groups (`Channel` > `Advanced` > `IR Presets` > `Custom Groups` > Sync).
2. Perform a frequency coordination.
3. Create a custom group of those frequencies (see the Custom Groups topic in the Wireless Workbench® help system for these steps).
4. IR sync all transmitters to assign custom group and channel information.

Set Up Custom Groups on the ADX5D

You can also set custom groups using just the ADX5D receiver if you don't use or have access to Wireless Workbench.

1. Go to `Device Cfg` > `Advanced` > `Device RF` > `Custom Groups`.
2. Manually set the group ID, channel ID, and frequency. Use the arrows to select each field, press enter to edit, press enter again to confirm.
    1. Load copies custom group information to all other networked AD receivers with the same tuning band.
    2. Clear removes custom group information from your device, but does not affect networked receivers.
3. Perform a sound check. Use the microphone offset feature to adjust the gain on each transmitter.
4. Go to `Device Cfg.` > `Party Dial`.

Note: If party dial is engaged following a standard group/channel scan, all frequencies in the selected group will be included. Blue LEDs confirm audio is being received on the selected channel.

Transmission Modes

The receiver offers two transmission modes to efficiently manage the available spectrum used by the transmitters.

Standard Mode

Standard mode employs channel spacing that allows for the operation of transmitters at various power levels.

Standard mode is ideal for situations where spectrum is not limited or when you need to operate transmitters at higher power levels to increase range.

High Density Mode

High density mode creates additional bandwidth for more channels in crowded RF environments by transmitting at 2 mW RF power and narrowing the modulation bandwidth.

High density mode is ideal for applications where many channels are needed in a confined area, transmission distances are short, and the number of available frequencies is limited.

***Note**: Operation mode varies according to region.*

Selecting a Transmission Mode

1. From the Device Configuration menu, go to `Device` RF > `Trans` `Mode`.
2. Press O to enable editing. Use the arrow buttons to select a mode.
3. Press O to save.

Frequency Diversity

Frequency diversity enables seamless, uninterrupted audio for mission-critical applications. Frequency diversity works by transmitting the audio on two independent frequencies from an ADX2FD handheld transmitter or from 2 AD/ADX series transmitters.

When operated in frequency diversity mode, the receiver uses two frequencies to provide a single channel of audio. If one frequency experiences interference, the audio from the other frequency is used to prevent dropouts or interruption of the audio.

Using frequency diversity in conjunction with interference detection provides an additional layer of protection for the audio signal.

1. From the channel menu: `Advanced` > `Frequency` `Diversity`.
2. Choose one of the following frequency diversity modes:
   - Combining: For use with a single ADX2FD handheld transmitter
   - Selection: For use with a pair of AD/ADX series transmitters
3. Press O to save.
4. Perform an IR sync between the receiver and the transmitters.

FD-S Advanced Settings

Setting	Description
Override / Lock to	Enables the ability to override the FD-S algorithm and manually select the receiver.

Setting	Description
Monitor 3.5mm Output	Configures the 3.5mm output to monitor pre- or post- FD-S selection.
Audio Evaluation	*When OFF:* Only the RF assessment to the FD-S pairs is made. Recommended when two separate inputs are in use. *When ON:* If both RF channels in the FD-S pair pass RF assessment, an optional assessment of the audio signal level is made. If the difference in the audio level is significant, the algorithm selects the higher of the two signals.

Interference Management

See Country-Specific Functionality Restrictions.

In the event of signal degradation, interference management technology provides options to move to a clean, compatible frequency, either manually or automatically.

Respond to an alert by manually selecting a new frequency, or allow the Spectrum Manager or Wireless Workbench to automatically deploy a backup frequency the instant interference is detected.

Tip: To dismiss a interference alert, select the affected channel, and then select Dismiss.

Setting the Detection Mode

The detection mode determines how the receiver will switch to a clear frequency in the event of interference.

1. Select a channel and navigate to: `Advanced` > `Interf. Mgt` > `Detection Mode`
2. Choose one of the following modes:
   - Manual: Select a frequency manually when interference occurs
   - Automatic: Allow the receiver to automatically select a new frequency

Unregistered Transmitter Action

The unregistered transmitter setting determines how the receiver reacts to the presence of unregistered transmitters, which can be a potential source of interference. If a transmitter is not listed in the receiver's Tx Slots, then that transmitter is considered unregistered to the receiver channel.

From the Interf. Mgt menu, choose one of the following options:

- Allow: The receiver will pass audio from the unregistered transmitter
- Warn: The receiver will display a warning when an unregistered transmitter is detected
- Block: The receiver will treat the unregistered transmitter as interference and will block the audio

Frequency Server

The frequency server option allows you to assign a networked Spectrum Manager as a server for clear frequencies in the event of interference.

1. From the Interf. Mgt menu, select Freq. Server
2. Press O to enable editing and select a Spectrum Manager from your network.
3. Press O to save.

3.5 mm. Output Settings

Choose a mode for your 3.5 mm. output depending on which equipment you use with the receiver.

Mode	Tip Audio	Ring Audio	Sleeve	Signal Type
Balanced Sum	+	-	Ground	Balanced mono
Balanced Rx2	+	-		
Balanced Rx1*	+	-		
Sum Rx1 + Rx2	+	+		Unbalanced dual mono
Solo Rx2	+	+		
Solo Rx1	+	+		
Stereo Rx1/Rx2* (default)	+ (Rx1)	+ (Rx2)		Unbalanced stereo

***** When ADX5D is operating in FD-S with Pre selection chosen, the sum will continue to output the Post FD-S audio

Firmware

Firmware is embedded software in each component that controls functionality. Installing the latest version of firmware updates the receiver to incorporate additional features and enhancements. New versions of the firmware can be uploaded and installed using the Shure Update Utility tool. Software is available for download from http://www.shure.com/firmware.

Firmware Versioning

When you update receiver firmware, update your transmitters to the same firmware version to ensure consistent operation.

The firmware of all devices has the form of MAJOR.MINOR.PATCH (e.g., 1.2.14). At a minimum, all devices on the network (including transmitters) must have the same MAJOR and MINOR firmware version numbers (e.g., 1.2.x).

Updating the Receiver Firmware

CAUTION! Ensure that receiver power and network connections are maintained during a firmware update. Do not turn off the receiver until the update is complete.

1. Open the Shure Update Utility.
2. Click Check for Updates to view new versions available for download.
3. Select the updates and click Download.
4. Connect your receiver to your computer via USB-C.
5. Open the Update Devices tab to view all Shure devices connected to the computer.
6. Select your receiver.
7. Press Send Updates to download the latest firmware to the receiver.

Updating the Transmitter Firmware

1. From the Device Configuration menu of the receiver: Tx FW Update.
2. Turn on the transmitter and align the IR sync windows on the transmitter and receiver. The red alignment LED will illuminate when alignment is correct.
3. Maintain alignment and press O on the receiver to begin the update.

   Important: Alignment must be maintained during the entire update cycle. Percentage of update progress appears on the receiver display.

Troubleshooting

Problem	Solution
No sound	Make sure the receiver and transmitter are powered on and are set to the same channel Perform a scan and sync to ensure the transmitter and receiver are set to the same group and channel Make sure the transmitter and receiver are in compatible bands Check that all cables and connectors are working correctly Re-sync all receivers and transmitters after enabling or disabling encryption
Faint sound, distortion	Adjust the system gain on the receiver. Ensure the output level of the receiver corresponds to the mic/line input setting of the mixing console, amplifier, or DSP Check that all cables and connectors are working correctly
Lack of range, unwanted noise bursts, or dropouts	Make sure the receiver antennas are securely attached Perform a group or channel scan to find the best open frequency. Perform a sync to transfer the setting to the transmitter For multiple systems, check that all systems are set to channels in the same group (systems in different bands do not need to be set to the same group) Maintain a line of sight between transmitter and receiver antennas Move or point receiver antennas away from metal objects or other sources of RF interference (such as LED walls, computers, digital effects, network switches, wireless access points, network cables and Personal Stereo Monitor (PSM) wireless systems) Eliminate RF overload: Move the transmitter further away from the receiver—at least 6 m (20 ft) Reduce the transmitter RF power level If you are using active antennas, reduce antenna or amplifier gain Use omnidirectional antennas

Problem	Solution
Cannot add network ID in AD610 properties panel in Wireless Workbench	Install the latest version of Wireless Workbench Update AD610 to latest firmware
Experiencing ShowLink® interference	Move or point receiver antenna away from metal objects or other sources of RF interference Reboot the ADX5D
Not able to set ShowLink® mode on ADX5D	Verify that your attached backplate and mode enable ShowLink® - see Country-Specific Functionality Restrictions.
ADX5D not appearing in Wireless Workbench	Ensure that there is an AD610 connected to your network with a network ID set Check that the ADX5D is in network mode Verify that the ADX5D's client ID matches the AD610s network ID Install the latest version of Wireless Workbench Reboot the ADX5D
Linked transmitters not appearing in Wireless Workbench	Perform a scan and sync to ensure the transmitter and receiver are set to the same group and channel Make sure the transmitter and receiver are in compatible bands Update transmitter to latest firmware

Notifications

The following alerts are displayed in the ADX5D menu screens. If the suggested actions do not resolve the issue, contact your Shure customer service representative.

Device Notifications

Message	Action
RF Power Overload	Confirm there are no high power transmitters in the vicinity
Over Temperature	Power off and allow device to cool before resuming use
SM Offline	Confirm the connected spectrum manager is powered on and online
Back Plate Failure	Power off the unit Remove the back plate Confirm connectors are not obstructed or damaged Reconnect the back plate

Message	Action
FPGA Unresponsive	Reboot the unit If the alert is still reported, attempt to update the firmware. If the condition persists, contact support.
SL Proc. Failure	Reboot the unit If the alert is still reported, attempt to update the firmware. If the condition persists, contact support.
3.5mm Lim. Engaged	Adjust/reduce the following: 3.5mm level System gain Tx offset Source audio
3.5mm Overload	Confirm the 3.5mm output format is appropriate for the connected output device Adjust the 3.5mm limiter Check the connection for shorts
Low Voltage	Check the Power Status in the device configuration menu to toggle this alert on/off and to set the power threshold for the alert. The low voltage warning threshold can be set from 6.1V to 18V in increments of 0.1V.

Channel Notifications

Message	Action
Interference	Perform a group or channel scan and sync the transmitter For multiple systems, check that all systems are set to channels in the same group (systems in different bands do not need to be set to the same group). Maintain a line of sight between transmitter and receiver antennas. Move or point receiver antennas away from metal objects or other sources of RF interference (LED walls, computers, digital effects, network switches, network cables and Personal Stereo Monitor (PSM) wireless systems). Eliminate RF overload (see below).
Unregistered AD Tx	Ensure all transmitters are assigned to transmitter slots.
Multiple Tx Active	Enter the `Channel` > `Tx Slots` menu. Select the desired transmitter and select Activate.
Encryption Mismatch	Re-sync the transmitter with the intended receiver.
Tx Overload	Confirm the input pad and transmitter offset are appropriate for the source audio.
Tx Muted	Unmute the active transmitter.
Tx RF Muted	Disable RF mute on the active transmitter.

Message	Action
Firmware Mismatch	Use `Device Cfg` > `Tx FW Update` to update the transmitter firmware.
Rx Muted	Navigate to `Channel` > `AudioOutput` and change the mode to On
Tx Battery Hot	Remove the transmitter from heat and replace the battery to let it cool down. If condition persists, the transmitter will shut down. Replace the battery and ensure unit is operating in normal temperature environments.

Contact Customer Support

Didn't find what you need? Contact our customer support to get help.

Receiver Frequency Bands

Band	Frequency Range (MHz)
G53	470 to 510
G54	479 to 565
G55†	470 to 636*
G56	470 to 636
G57 (G57+)	470 to 616* (614 to 616***)
G62	510 to 530
G63	487 to 636
H54	520 to 636
K53	606 to 698*
K54	606 to 663**
K55	606 to 694
K56	606 to 714
K57	606 to 790
K58	622 to 698
L54	630 to 787
L60	630 to 698
P55	694 to 703, 748 to 758, 803 to 806

Band	Frequency Range (MHz)
R52	794 to 806
JB	806 to 810
X51	925 to 937.5
X55	941 to 960
X56	960 to 1000

*With a gap between 608 to 614 MHz.

**With a gap between 608 to 614 MHz and a gap between 616 to 653 MHz.

***Selecting the G57+ band extends the G57 band with 2 MHz of additional spectrum between 614 to 616 MHz. Maximum transmitter power is limited to 10mW between 614 to 616 MHz.

†Operation mode varies according to region. In Brazil, High Density mode is used. The maximum power level for Peru is 10mW.

Specifications

UHF Specifications

RF Carrier Frequency Range

470–1000 MHz, varies by region (See frequency table)

Working Range (line of sight)

Note: Actual range depends on RF signal absorption, reflection, and interference

Standard Density Mode	75 m (246 ft)
High Density Mode	40 m (131 ft)

RF Sensitivity

−90 dBm at 10^{-5} BER

RF Tuning Step Size

25 kHz, varies by region

Image Rejection

>70 dB, typical

Spurious Rejection

>80 dB, typical

Connector Type

SMA (Shell=Ground, Center=Signal)

Impedance

50 Ω

ShowLink® Specifications

Frequency Range
2.40 to 2.4835 GHz (16 Channels)

Working Range
Note: Actual range depends on RF signal absorption, reflection, and interference

30m

Connector Type
SMA (Shell=Ground, Center=Signal)

Impedance
50 Ω

ShowLink® Antenna Power
2.5 dBm EIRP

Antenna Type
1 Omni 2.4 GHz

Network Type
IEEE 802.15.4

Audio Output

Gain Adjustment Range
−18 to +42 dB in 1 dB steps (plus Mute setting)

Impedance
66 Ω, Typical, TA3 Out

Full Scale Output (200K Ωload)
+9 dBV

Phantom Power Protection
Note: 3.5mm output does not have phantom power protection

Yes

Audio Frequency Response
Note: Dependent on microphone type

20 Hz – 20 kHz

Dynamic Range
129 dB

Total Harmonic Distortion
0.0006% at -6 dBFS, 1 kHz,

System Audio Polarity

Positive pressure on diaphragm produces positive voltage on audio+ with respect to audio-

Analog Output Latency

Standard Density Mode	2.08 ms
High Density Mode	2.96 ms

USB Input (used for firmware updates)

Connector Type

USB-C

USB Protocol

USB 2.0

USB Role

Peripheral (upstream-facing port)

USB Power Delivery

None

Power

DC Power Requirements

6V DC to 18V DC

Thermal Power Dissipation

maximum	4.8 W (18 V in, full brightness, all audio full scale out, and RF channels active)
nominal	4W (12 V in, no outputs, no linked transmitters)
minimum	2.3 W (6.5V in, both channels in standby)

Mechanical Specifications

Operating Temperature Range

Note: Battery characteristics may limit this range.

-18°C (0°F) to 50°C (122°F)

Storage Temperature Range

-29°C (-20°F) to 65°C (149°F)

Dimensions

29 x 88 x 108 mm H x W x D (No backplate)

Weight

0.24 kg (0.53 lbs), without antennas or backplate

Housing

Machined aluminum

Dimensions

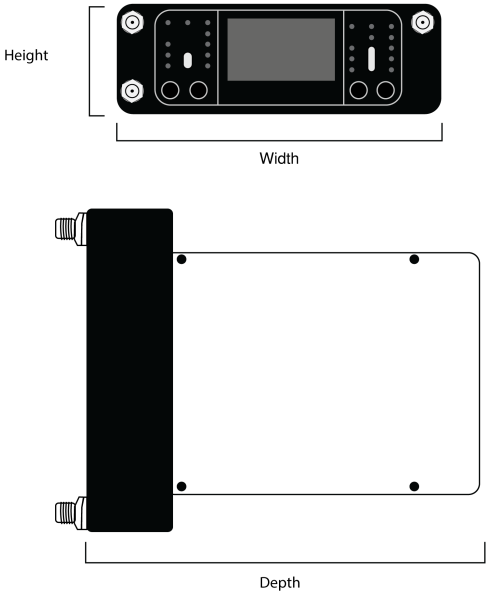

Pinout Diagrams

DB15

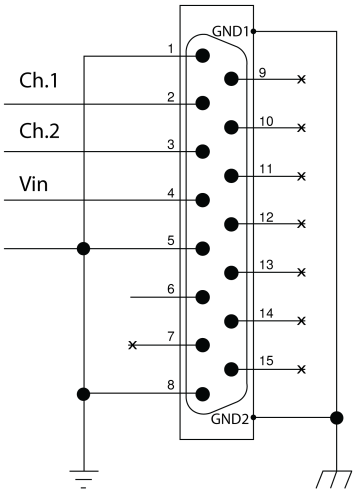

DB25

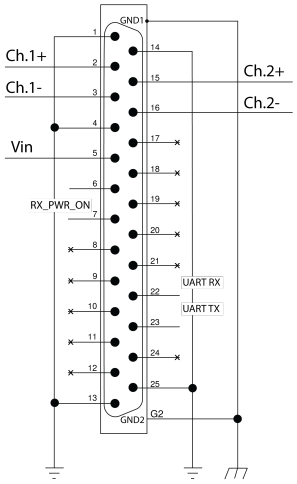

TA3M

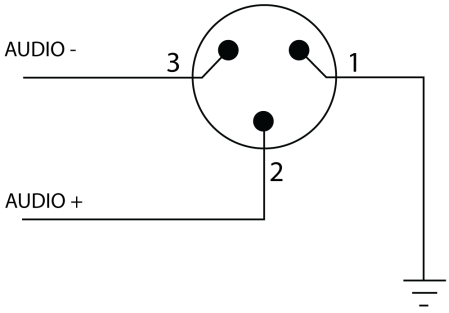

Hirose

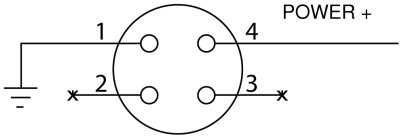

IMPORTANT SAFETY INSTRUCTIONS

1. READ these instructions.
2. KEEP these instructions.
3. HEED all warnings.
4. FOLLOW all instructions.
5. DO NOT use this apparatus near water.
6. CLEAN ONLY with dry cloth.
7. DO NOT block any ventilation openings. Allow sufficient distances for adequate ventilation and install in accordance with the manufacturer’s instructions.
8. DO NOT install near any heat sources such as open flames, radiators, heat registers, stoves, or other apparatus (including amplifiers) that produce heat. Do not place any open flame sources on the product.
9. DO NOT defeat the safety purpose of the polarized or grounding type plug. A polarized plug has two blades with one wider than the other. A grounding type plug has two blades and a third grounding prong. The wider blade or the third prong are provided for your safety. If the provided plug does not fit into your outlet, consult an electrician for replacement of the obsolete outlet.
10. PROTECT the power cord from being walked on or pinched, particularly at plugs, convenience receptacles, and the point where they exit from the apparatus.
11. ONLY USE attachments/accessories specified by the manufacturer.
12. USE only with a cart, stand, tripod, bracket, or table specified by the manufacturer, or sold with the apparatus. When a cart is used, use caution when moving the cart/apparatus combination to avoid injury from tip-over.



13. UNPLUG this apparatus during lightning storms or when unused for long periods of time.
14. REFER all servicing to qualified service personnel. Servicing is required when the apparatus has been damaged in any way, such as power supply cord or plug is damaged, liquid has been spilled or objects have fallen into the apparatus, the apparatus has been exposed to rain or moisture, does not operate normally, or has been dropped.
15. DO NOT expose the apparatus to dripping and splashing. DO NOT put objects filled with liquids, such as vases, on the apparatus.
16. The MAINS plug or an appliance coupler shall remain readily operable.
17. The airborne noise of the Apparatus does not exceed 70dB (A).
18. Apparatus with CLASS I construction shall be connected to a MAINS socket outlet with a protective earthing connection.
19. To reduce the risk of fire or electric shock, do not expose this apparatus to rain or moisture.
20. Do not attempt to modify this product. Doing so could result in personal injury and/or product failure.
21. Operate this product within its specified operating temperature range.

WARNING: Voltages in this equipment are hazardous to life. No user-serviceable parts inside. Refer all servicing to qualified service personnel. The safety certifications do not apply when the operating voltage is changed from the factory setting.

Certifications

Approved under the Declaration of Conformity (DoC) provision of FCC Part 15.

The equipment is intended to be used in professional audio applications.

FCC ID: DD4ADX5D. **IC:** 616A-ADX5D.

This product meets the Essential Requirements of all relevant European directives and is eligible for CE marking.

Meets essential requirements of the following European Directives:

EMC - 2014/30/EU

LVD - 2014/35/EU

RoHS - EU 2015/863

WEEE - 2012/19/EU

CE Notice: Hereby, Shure Incorporated declares that this product with CE Marking has been determined to be in compliance with European Union requirements. The full text of the EU declaration of conformity is available at the following site: https://www.shure.com/en-EU/support/declarations-of-conformity.

Authorized European representative:
Shure Europe GmbH
Department: Global Compliance
Jakob-Dieffenbacher-Str. 12
75031 Eppingen, Germany
Phone: +49-7262-92 49 0
Fax: +49-7262-92 49 11 4
Email: EMEAsupport@shure.de

เครื่องโทรคมนาคมและอุปกรณ์นี้มีความสอดคล้องตามมาตรฐานหรือข้อกำหนดทางเทคนิคของ กสทช.

（一）本产品符合“微功率短距离无线电发射设备目录和技术要求”的具体条款和使用场景；

（二）不得擅自改变使用场景或使用条件、扩大发射频率范围、加大发射功率（包括额外加装射频功率放大器），不得擅自更改发射天线；

（三）不得对其他合法的无线电台（站）产生有害干扰，也不得提出免受有害干扰保护；

（四）应当承受辐射射频能量的工业、科学及医疗（ISM）应用设备的干扰或其他合法的无线电台（站）干扰；

（五）如对其他合法的无线电台（站）产生有害干扰时，应立即停止使用，并采取措施消除干扰后方可继续使用；

（六）在航空器内和依据法律法规、国家有关规定、标准划设的射电天文台、气象雷达站、卫星地球站（含测控、测距、接收、导航站）等军民用无线电台（站）、机场等的电磁环境保护区域内使用微功率设备，应当遵守电磁环境保护及相关行业主管部门的规定。

低功率射頻器材技術規範

取得審驗證明之低功率射頻器材，非經核准，公司、商號或使用者均不得擅

自變更頻率、加大功率或變更原設計之特性及功能。低功率射頻器材之使用

不得影響飛航安全及干擾合法通信；經發現有干擾現象時，應立即停用，並

改善至無干擾時方得繼續使用。前述合法通信，指依電信管理法規定作業之

無線電通信。低功率射頻器材須忍受合法通信或工業、科學及醫療用電波輻

射性電機設備之干擾。

運用に際しての注意

この機器の使用周波数帯では、電子レンジ等の産業·科学·医療用機器のほか工場の製造ライン等で使用されている移動体識別用の構内無線局（免許を要する無線局）及び特定小電力無線局（免許を要しない無線局）並びにアマチュア無線局（免許を要する無線局）が運用されています。

1. この機器を使用する前に、近くで移動体識別用の構内無線局及び特定小電力無線局並びにアマ　チュア無線局が運用されていないことを確認して下さい。
2. 万一、この機器から移動体識別用の構内無線局に対して有害な電波干渉の事例が発生した場合には、 速やかに使用周波数を変更するか又は電波の発射を停止した上、下記連絡先にご連絡頂き、混　信回避のための処置等（例えば、パーティションの設置など）についてご相談して下さい。
3. その他、この機器から移動体識別用の特定小電力無線局あるいはアマチュア無線局に対して有害な電波干渉の事例が発生した場合など何かお困りのことが起きたときは、保証書に記載の販売代　理店または購入店へお問い合わせください。代理店および販売店情報は Shure 日本語ウェブサイト　http://www.shure.co.jp でもご覧いただけます。

現品表示記号について

2.4 DS4

現品表示記号は、以下のことを表しています。 この無線機器は 2.4GHz 帯の電波を使用し、変調方式は「 DS 」方式、想定与干渉距離は 40m です。 2,400MHz ～ 2,483.5MHz の全帯域を使用し、移動体識別装置の帯域を回避することはできません 。

部件名称	有害物质					
	铅	汞	镉	六价铬	多溴联苯	多溴二苯醚
电路模块	X	○	○	○	○	○
金属模块	X	○	○	○	○	○
线缆及其组件	X	○	○	○	○	○
外壳	○	○	○	○	○	○

电源适配器*	X	○	○	○	○	○
电池组*	X	○	○	○	○	○

本表格依据SJ/T11364的规定编制。

O: 表示该有害物质在该部件所有均质材料中的含量均在GB/T26572规定的限量要求以下。

X: 表示该有害物质至少在该部件某一均质材料中的含量超出GB/T26572规定的限量要求。

注：本产品大部分的部件采用无害的环保材料制造，含有有害物质的部件皆因全球技术发展水平

的限制而无法实现有害物质的替代。

***:表示如果包含部分**

Information to the user

This device complies with part 15 of the FCC Rules. Operation is subject to the following two conditions:

1. This device may not cause harmful interference.
2. This device must accept any interference received, including interference that may cause undesired operation.

Note: This equipment has been tested and found to comply with the limits for a Class B digital device, pursuant to part 15 of the FCC Rules. These limits are designed to provide reasonable protection against harmful interference in a residential installation. This equipment generates uses and can radiate radio frequency energy and, if not installed and used in accordance with the instructions, may cause harmful interference to radio communications. However, there is no guarantee that interference will not occur in a particular installation. If this equipment does cause harmful interference to radio or television reception, which can be determined by turning the equipment off and on, the user is encouraged to try to correct the interference by one or more of the following measures:

- Reorient or relocate the receiving antenna.
- Increase the separation between the equipment and the receiver.
- Connect the equipment to an outlet on a circuit different from that to which the receiver is connected.
- Consult the dealer or an experienced radio/TV technician for help.

Canada Warning for Wireless

This device operates on a no-protection, no-interference basis. Should the user seek to obtain protection from other radio services operating in the same TV bands, a radio licence is required. For further details, consult Innovation, Science and Economic Development Canada's document Client Procedures Circular CPC-2-1-28, Voluntary Licensing of Licence-Exempt Low-Power Radio Apparatus in the TV Bands.

Ce dispositif fonctionne selon un régime de non_brouillage et de non_protection. Si l'utilisateur devait chercher à obtenir une certaine protection contre d'autres services radio fonctionnant dans les mêmes bandes de télévision, une licence radio serait requise. Pour en savoir plus, veuillez consulter la Circulaire des procédures concernant les clients CPC_2_1_28, Délivrance de licences sur une base volontaire pour les appareils radio de faible puissance exempts de licence et exploités dans les bandes de télévision d'Innovation, Sciences et Développement économique Canada.

This radio transmitter [616A-ADX5D] has been approved by Innovation, Science and Economic Development Canada to operate with the antenna types listed below, with the maximum permissible gain indicated. Antenna types not included in this list that have a gain greater than the maximum gain indicated for any type listed are strictly prohibited for use with this device.

Le présent émetteur radio [i616A-ADX5D] a été approuvé par Innovation, Sciences et Développement économique Canada pour fonctionner avec les types d'antenne énumérés ci_dessous et ayant un gain admissible maximal. Les types d'antenne non

inclus dans cette liste, et dont le gain est supérieur au gain maximal indiqué pour tout type figurant sur la liste, sont strictement interdits pour l'exploitation de l'émetteur.

CAN ICES-003 (B)/NMB-003(B)

This device contains licence-exempt transmitter(s)/receiver(s) that comply with Innovation, Science and Economic Development Canada's licence-exempt RSS(s). Operation is subject to the following two conditions:

1. This device may not cause interference.
2. This device must accept any interference, including interference that may cause undesired operation of the device.

L'émetteur/récepteur exempt de licence contenu dans le présent appareil est conforme aux CNR d'Innovation, Sciences et Développement économique Canada applicables aux appareils radio exempts de licence. L'exploitation est autorisée aux deux conditions suivantes :

1. L'appareil ne doit pas produire de brouillage;
2. L'appareil doit accepter tout brouillage radioélectrique subi, même si le brouillage est susceptible d'en compromettre le fonctionnement.

Australia Warning for Wireless

This device operates under an ACMA class licence and must comply with all the conditions of that licence including operating frequencies. Before 31 December 2014, this device will comply if it is operated in the 520-820 MHz frequency band.
WARNING: After 31 December 2014, in order to comply, this device must not be operated in the 694-820 MHz band.

Country-Specific Functionality Restrictions

- Interference avoidance is only available in Manual mode when using DB15 or DB25 backplates with United States models.
- ShowLink® is not available when ADX5D is used with third party control devices in United States models.