WHEELS : GOBO, COLOUR & ANIMATION

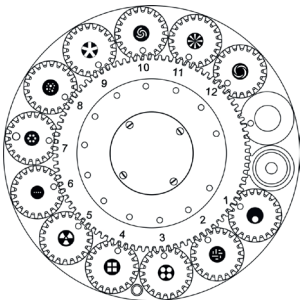

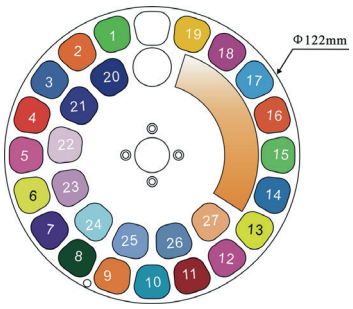

GOBO WHEEL 1

Rotating Gobo			
1	310	Eccentric Dot	GP60303052013
2	358	Lines Mix	GP60303052029
3	328	Dot Square 4	GP60303052003
4	332	Square Beam 4	GP60303052030
5	149	Nuclear	GP60303052031
6	314	Dot Line 4	GP60303052073
7	320	Dot Ring 6	GP60303052015
8	324	Dot Mix	GP60303052032
9	342	Five Spokes	GP60303052033
10	114	Nested Half Rings	GP60303052066
11	343	Eight Spokes	GP60303052002
12	111	Nested Ring Lights	GP60303052034

This side facing front lens

COLOUR WHEEL

Outer Ring Colour		
1	Green	GP603050332620
2	Orange	GP603050332630
3	Blue	GP603050332640
4	Red	GP603050332650
5	Pink	GP603050332560
6	Medium Yellow	GP603050332770
7	Deep Purple	GP603050332750
8	Velvet Green	GP603050334490
9	Amber	GP603050332580
10	Light Blue	GP603050334480
11	Light Red	GP603050332720
12	Follies Pink	GP603050334470
13	Yellow	GP603050332780
14	Slate Blue	GP603050334500
15	Dark Green	GP603050334430
16	Dark Amber	GP603050332790
17	Medium Blue	GP603050334440
18	Magical Magenta	GP603050332740
19	Oklahoma Yellow	GP603050334460
Inner Ring Colour		
20	Congo Blue	GP603050332610
21	UV	GP603050332570
22	Minus Green 1/4	GP603050332540
23	Minus Green 1/2	GP603050332550
24	CTB 1/4	GP603050332590
25	CTB 1/2	GP603050332530
26	CTB	GP603050332680
27	Light Amber	GP603050334450

WHEELS : GOBO, COLOUR & ANIMATION

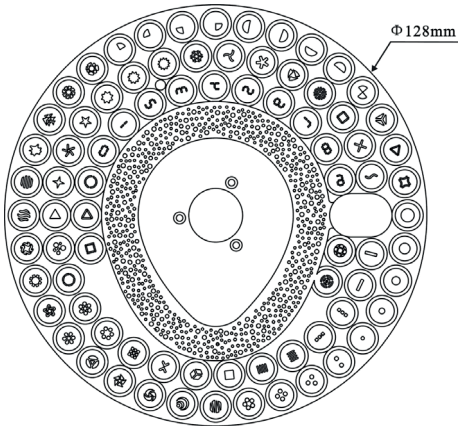

GOBO WHEEL 2

Static Gobo - GP60303990159A

1	302	80% Iris Beam	21	260	Arrows	41	354	Four Lines V	61	435	Nested Cross
2	304	60% Iris Beam	22	265	Iris 8	42	330	Square Beam	62	421	Split Square 1
3	306	40% Iris Beam	23	329	Dot Mix 8	43	363	Rubik Cube	63	431	X Cross
4	308	20% Iris Beam	24	290	Quarter Beam NE	44	437	Split Cross	64	348	Tilde
5	312	Dot Line 2	25	291	Quarter Beam SE	45	334	Square Beam 9	65	188	Mirror Ball 9
6	326	Dot Triangle 3	26	292	Quarter Beam SW	46	320	Dot Ring 6	66	417	Split Target
7	328	Dot Square 4	27	293	Quarter Beam NW	47	321	Dot Ring 7	67	422	Split Square 2
8	319	Dot Ring 5	28	296	Half Beam Up	48	413	Split Circle 6	68	427	Split Triangle 2
9	257	Zig Zag Light	29	295	Half Beam Down	49	324	Dot Mix	69	411	Split Circle 2
10	135	Vortex Light	30	298	Half Beam Left	50	340	Triangle Beam	70	450	Number 0
11	110	Spiral	31	299	Half Beam Right	51	374	Compass 4	71	451	Number 1
12	118	Helix 5	32	418	Crash Test Icon	52	346	Star Line 5	72	452	Number 2
13	424	Triangle Beam	33	341	Split Triangle 4	53	345	Star 5	73	453	Number 3
14	263	Daisy	34	426	Split Triangle 1	54	378	Star 8	74	454	Number 4
15	373	Nested Star	35	419	Iron Ball Light	55	380	Star 10	75	455	Number 5
16	368	Square Ring 8	36	351	Vertical Line	56	382	Star 12	76	456	Number 6
17	439	Circular Saw 4	37	350	Bold Line	57	262	Arrow Ring 6	77	457	Number 7
18	099	Waves Light	38	371	Square Line 3 V	58	117	Helix 3	78	458	Number 8
19	274	Prison Bars 4	39	370	Square Line 3 H	59	342	Five Spokes	79	459	Number 9
20	269	Ink Stain	40	353	Four Lines H	60	261	Arrow Ring 3			

This side facing light source

PRISMS & FROSTS

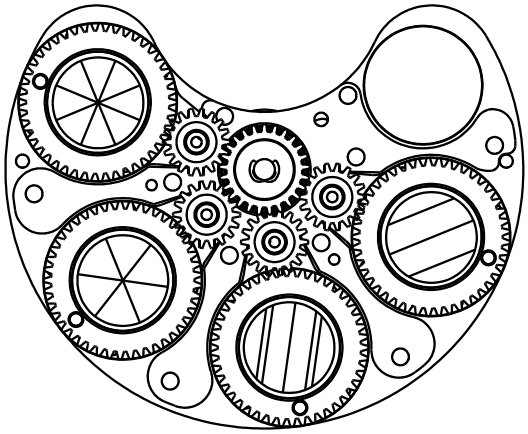

PRISM WHEEL 1

DMX Channel 24 @ Ba Mode / 26 @ Std Mode / 34 @ Ext Mode		
Prism 1	8-facet circular	GP60302030239005
Prism 2	6-facet circular	GP60302030238005
Prism 3	6-facet linear	GP60302030242005
Prism 4	4-facet linear	GP60302030241A05
Frost	Light 1°	GP60301020269010

This side facing light source

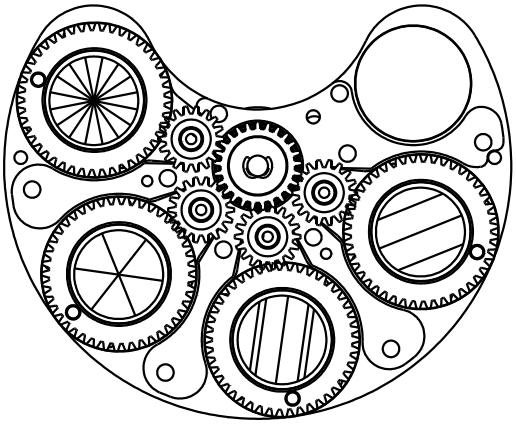

PRISM WHEEL 2

DMX Channel 24 @ Ba Mode / 27 @ St Mode / 36 @ Ext Mode		
Prism 1	16-facet circular	GP60302030240A05
Prism 2	6-facet circular	GP60302030238005
Prism 3	6-facet linear	GP60302030242005
Prism 4	4-facet linear	GP60302030241A05
Frost	Heavy 5°	GP60301020270010

This side facing light source

FIXTURE DRAWINGS

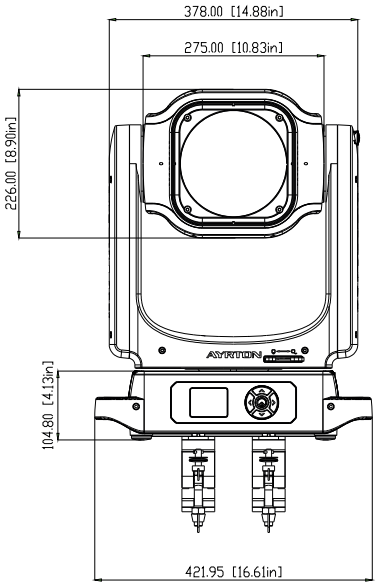

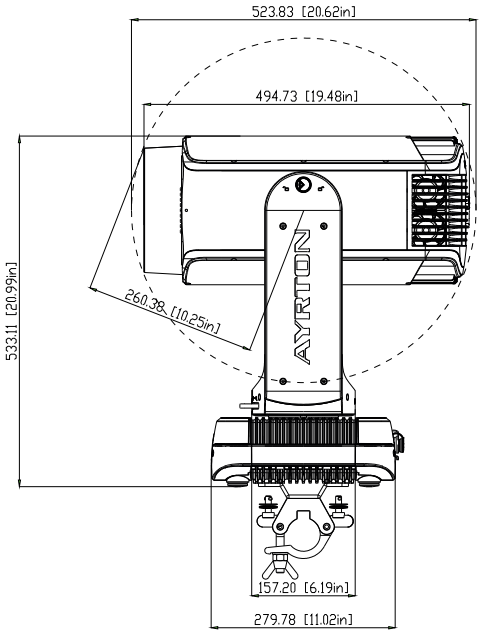

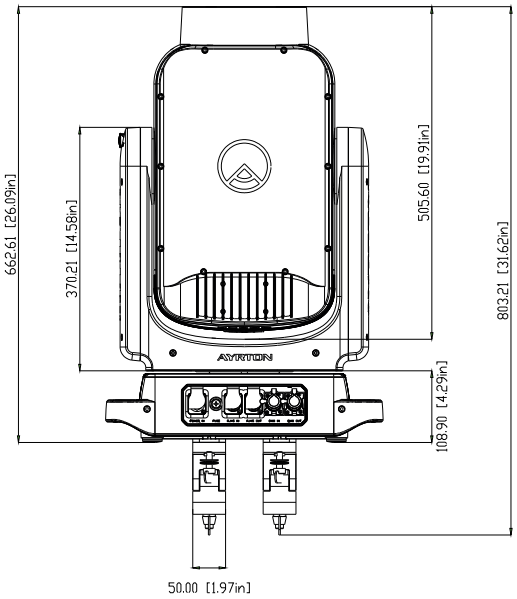

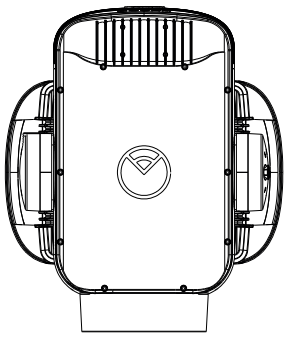

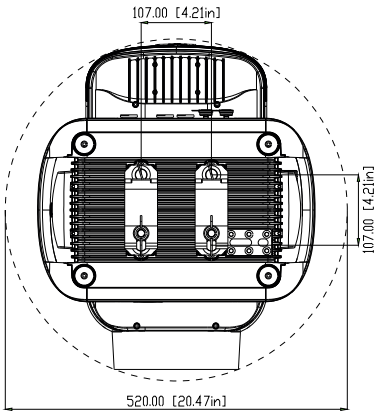

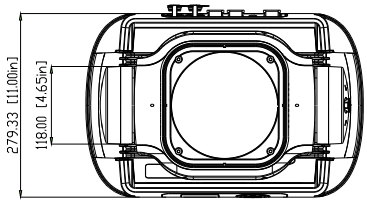

FOAM DRAWINGS

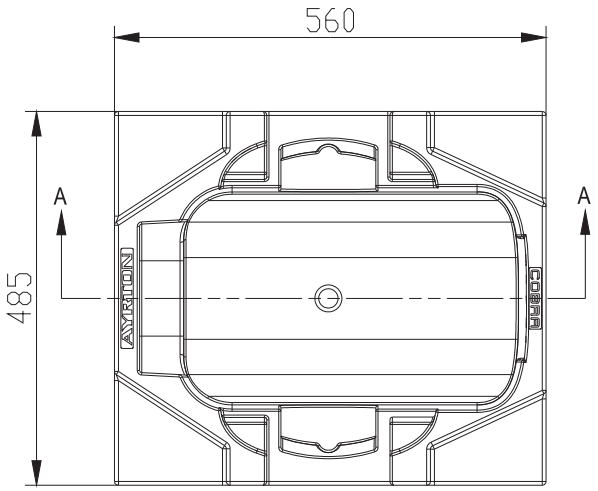

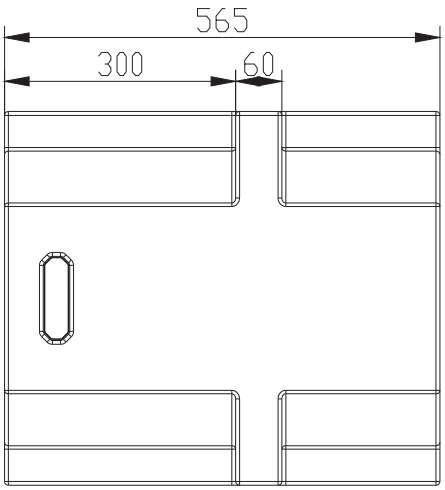

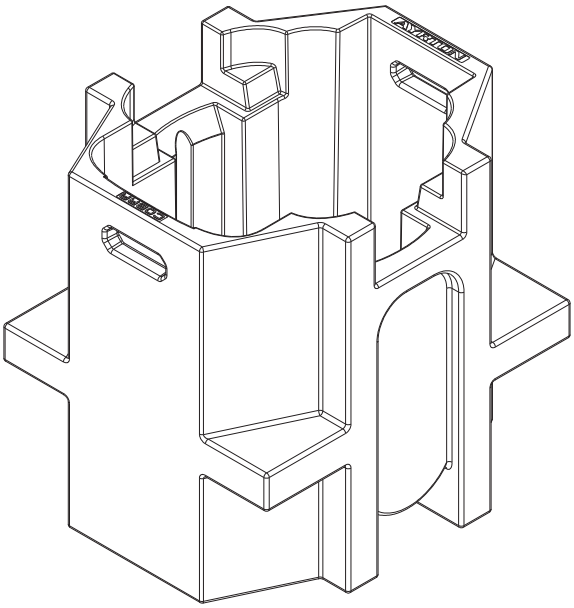

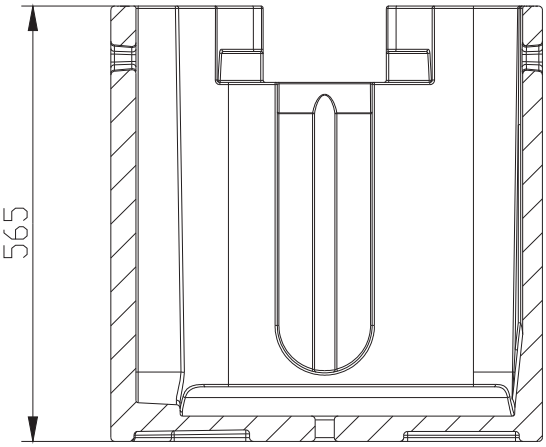

Section:A-A

Dimension tolerance (mm): ± 5
Version: 1.0

⚠ DISCLAIMER

Errors and omissions for all information given in this document are possible. All information is subject to change without prior notice.