WHEELS - GOBO & COLOUR



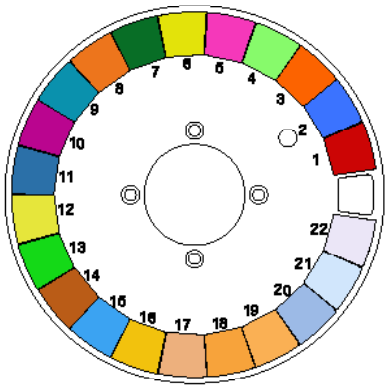

GOBO WHEEL

Static Gobo - GPD0100045

1	302	80% Iris Beam	16	411	Split Circle 2
2	304	60% Iris Beam	17	428	Split Triangle 3
3	306	40% Iris Beam	18	374	Compass 4
4	308	20% Iris Beam	19	345	Star Beam
5	312	Dot Line 2	20	342	Five Spokes
6	326	Dot Triangle 3	21	340	Triangle Beam
7	328	Dot Square 4	22	117	Helix 3
8	321	Dot Ring 7	23	430	Inverted Cross
9	324	Dot Mix	24	363	Rubik Cube
10	273	Prison Bars 3	25	332	Square Beam 4
11	099	Waves Light	26	330	Square Beam
12	298	Half Beam Left	27	348	Tilde
13	299	Half Beam Right	28	350	Bold Line
14	296	Half Beam Up	29	351	Vertical Line
15	295	Half Beam Down			

This side facing light source

COLOUR WHEEL

Static Wheel - GPP0098809

1	Red	12	Medium Yellow
2	Blue	13	Dark Green
3	Orange	14	Dark Amber
4	Green	15	Medium Blue
5	Pink	16	Oklahoma Yellow
6	Yellow	17	Light Amber
7	Velvet Green	18	CTO
8	Amber	19	CTO 1/2
9	Light Blue	20	CTB
10	Follies Pink	21	CTB 1/2
11	Slate Blue		

This side facing light source

PRISMS & FROSTS

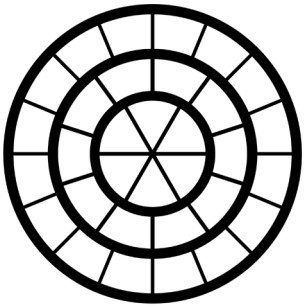

PRISM 1

DMX Channel 25 @ Ext Mode

32-facet circular	-

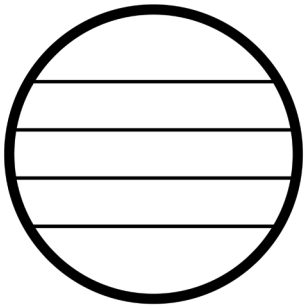

PRISM 2

DMX Channel 30 @ Ext Mode

5-facet linear	-



FROST 1

DMX Channel 31 @ Ext Mode

Light 1°	-



FROST 2

DMX Channel 32 @ Ext Mode

Heavy 5°	-

FIXTURE DRAWINGS

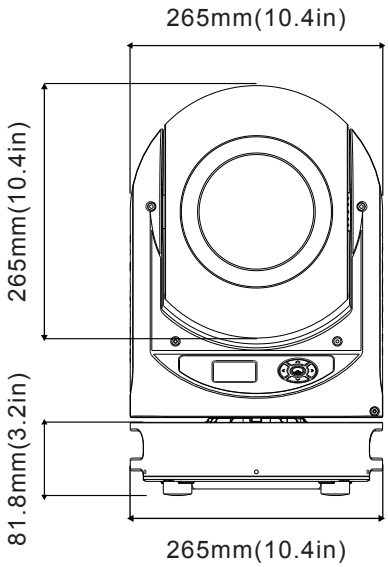

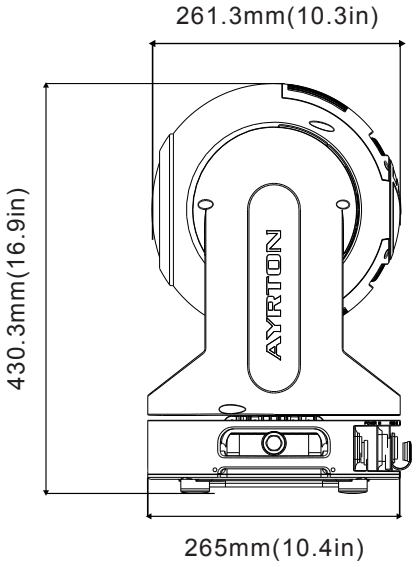

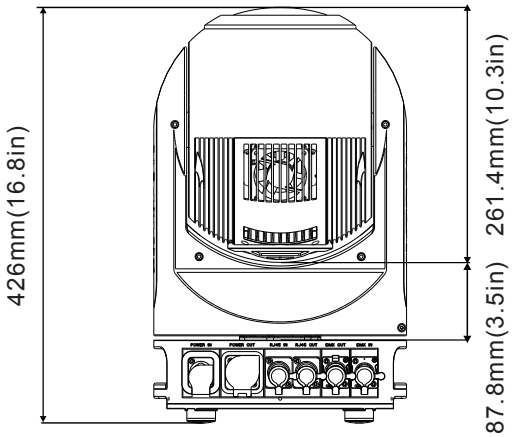

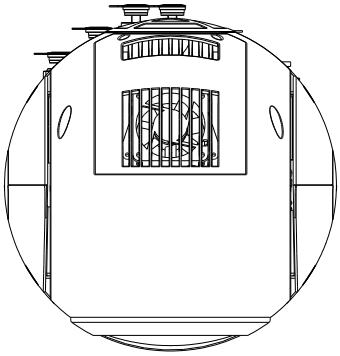

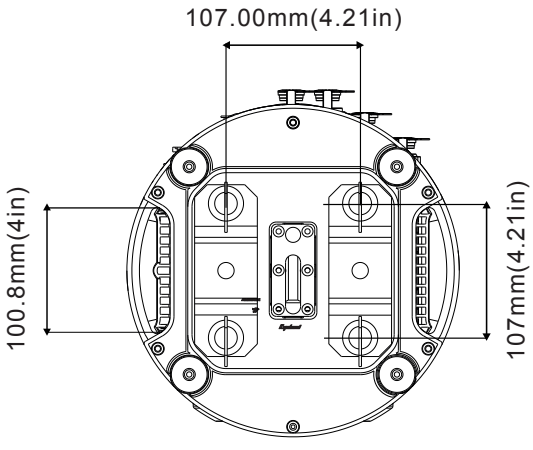

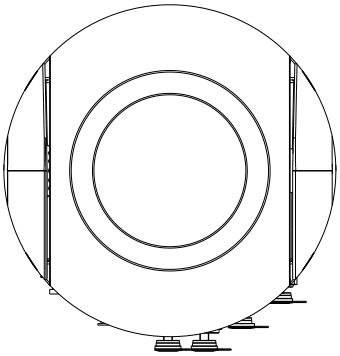

FOAM DRAWINGS: SINGLE FOAM

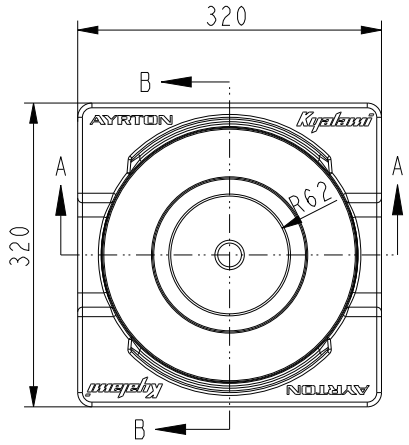

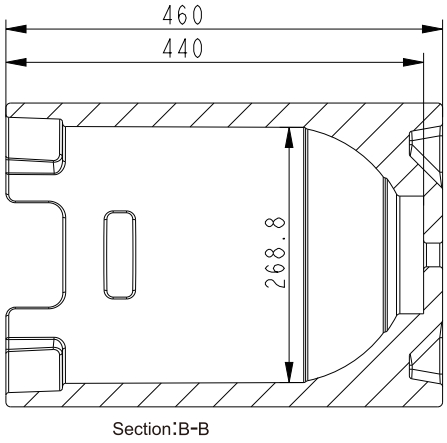

Section:B-B

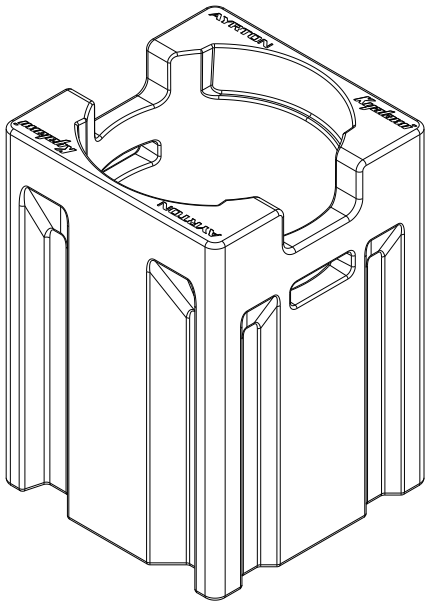

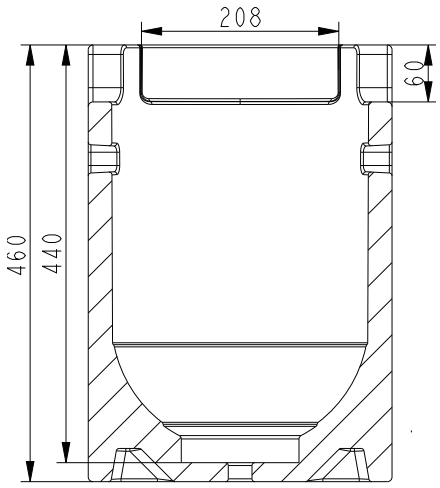

Section:A-A

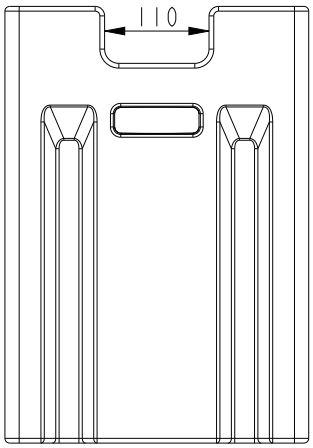

Dimension tolerance (mm): ± 5
Version: 1.0

FOAM DRAWINGS: DUAL FOAM

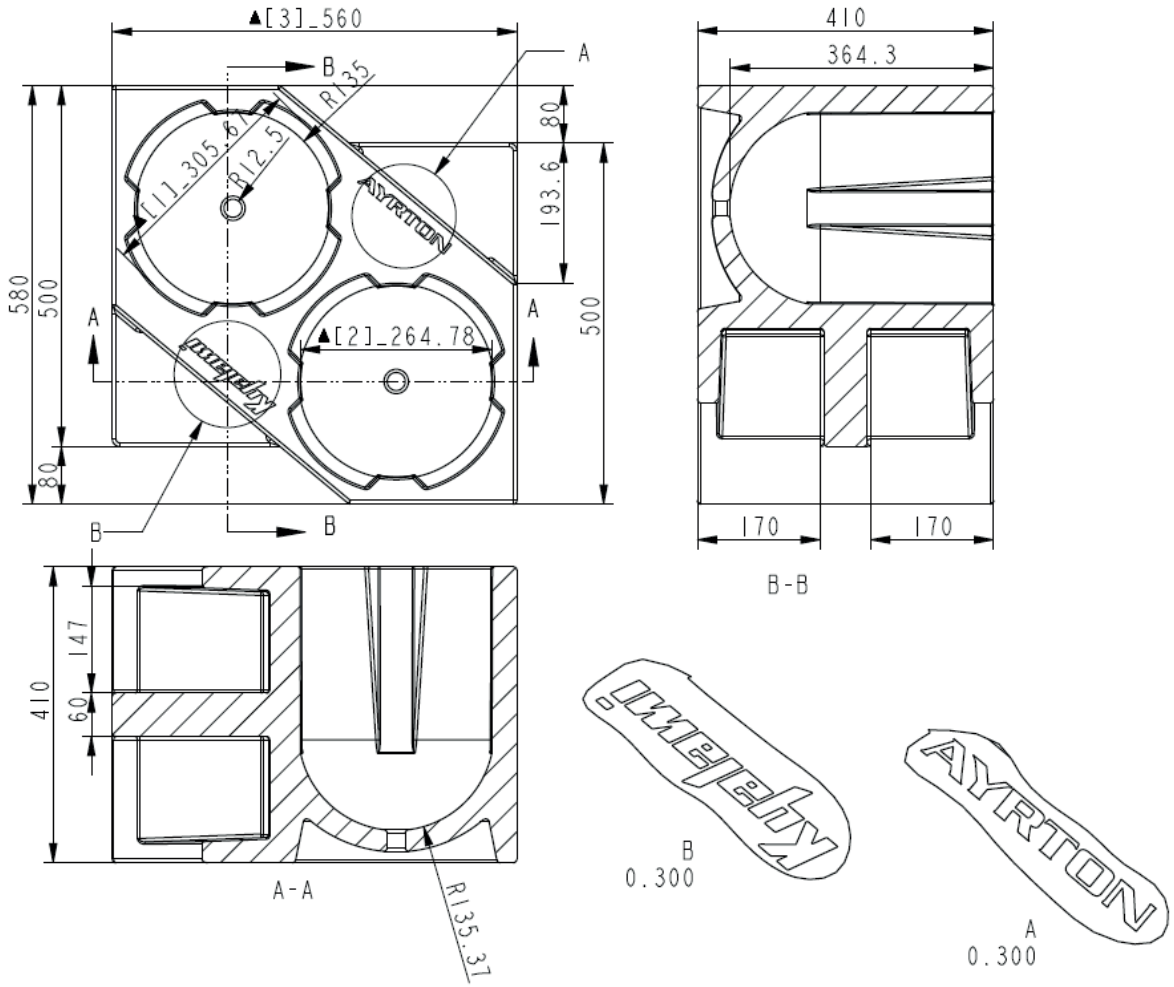

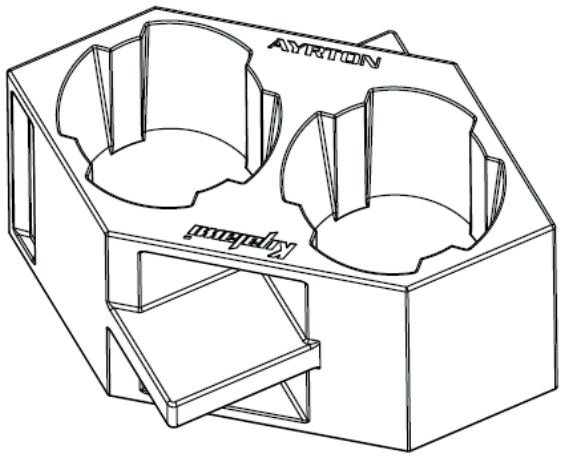

⚠ DISCLAIMER

Errors and omissions for all information given in this document are possible. All information is subject to change without prior notice.