WHEELS : GOBO & COLOUR

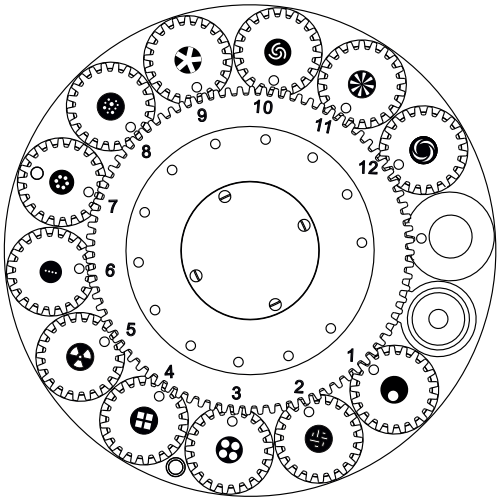

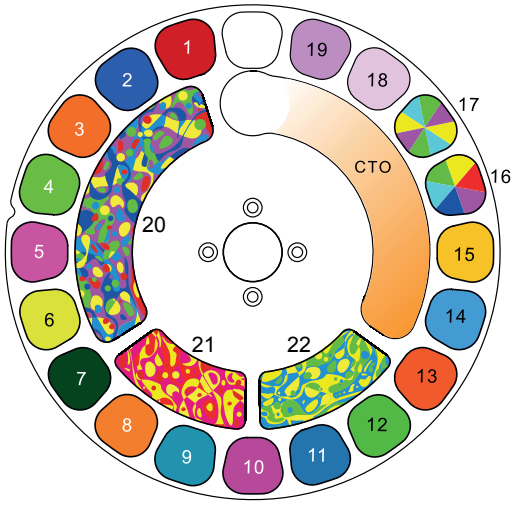

GOBO WHEEL 1

Rotating Gobo			
1	310	Eccentric Dot	GPG0500248
2	358	Lines Mix	GPG0500249
3	328	Dot Square 4	GPG0500250
4	332	Square Beam 4	GPG0500251
5	149	Nuclear	GPG0500252
6	314	Dot Line 4	GPG0500253
7	320	Dot Ring 6	GPG0500254
8	324	Dot Mix	GPG0500255
9	342	Five Strokes	GPG0500256
10	114	Nested Half Rings	GPG0500257
11	343	Eight Spokes	GPG0500258
12	111	Nested Rings Light	GPG0500259

COLOUR WHEEL

1	Red	12	Dark Green
2	Blue	13	Dark Amber
3	Orange	14	Medium Blue
4	Green	15	Oklahoma Yellow
5	Pink	16	Multicolour #1
6	Yellow	17	Multicolour #2
7	Velvet Green	18	Minus Green ¼
8	Amber	19	Minus Green ½
9	Light Blue	20	Multicolour Animation
10	Follies Pink	21	Red/Yellow Animation
11	Slate Blue	22	Green/Yellow Animation

WHEELS : GOBO & COLOUR

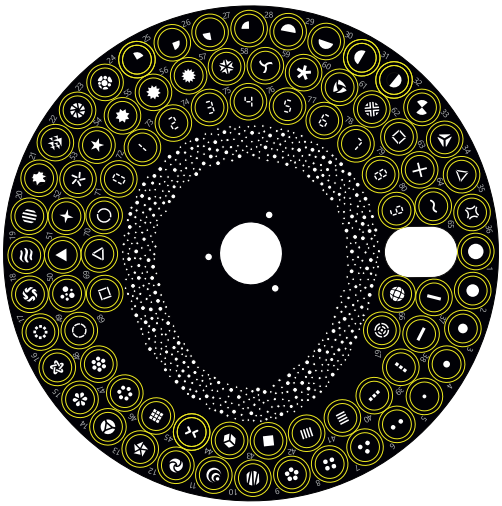

GOBO WHEEL 2

Static Gobo -

1	302	80% Iris Beam	21	260	Arrows	41	354	Four Lines V	61	435	Nested Cross
2	304	60% Iris Beam	22	265	Iris 8	42	330	Square Beam	62	421	Split Square 1
3	306	40% Iris Beam	23	329	Dot Mix 8	43	363	Rubik Cube	63	431	X Cross
4	308	20% Iris Beam	24	290	Quarter Beam NE	44	437	Split Cross	64	348	Tilde
5	312	Dot Line 2	25	291	Quarter Beam SE	45	334	Square Beam 9	65	188	Mirror Ball 9
6	326	Dot Triangle 3	26	292	Quarter Beam SW	46	320	Dot Ring 6	66	417	Split Target
7	328	Dot Square 4	27	293	Quarter Beam NW	47	321	Dot Ring 7	67	422	Split Square 2
8	319	Dot Ring 5	28	296	Half Beam Up	48	413	Split Circle 6	68	427	Split Triangle 2
9	257	Zig Zag Light	29	295	Half Beam Down	49	324	Dot Mix	69	411	Split Circle 2
10	135	Vortex Light	30	298	Half Beam Left	50	340	Triangle Beam	70	450	Number 0
11	110	Spiral	31	299	Half Beam Right	51	374	Compass 4	71	451	Number 1
12	118	Helix 5	32	418	Crash Test Icon	52	346	Star Line 5	72	452	Number 2
13	424	Triangle Beam	33	341	Split Triangle 4	53	345	Star 5	73	453	Number 3
14	263	Daisy	34	426	Split Triangle 1	54	378	Star 8	74	454	Number 4
15	373	Nested Star	35	419	Iron Ball Light	55	380	Star 10	75	455	Number 5
16	368	Square Ring 8	36	351	Vertical Line	56	382	Star 12	76	456	Number 6
17	439	Circular Saw 4	37	350	Bold Line	57	262	Arrow Ring 6	77	457	Number 7
18	099	Waves Light	38	371	Square Line 3 V	58	117	Helix 3	78	458	Number 8
19	274	Prison Bars 4	39	370	Square Line 3 H	59	342	Five Spokes	79	459	Number 9
20	269	Ink Stain	40	353	Four Lines H	60	261	Arrow Ring 3			

This side facing front lens

PRISMS

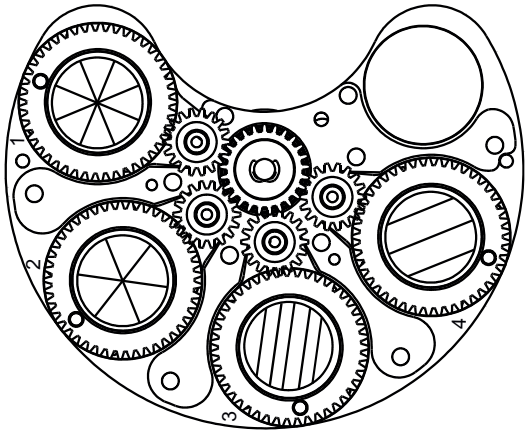

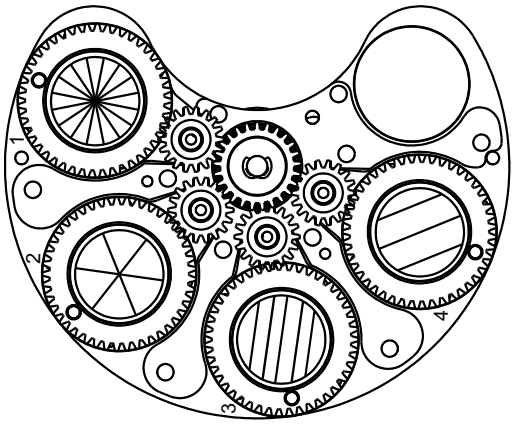

PRISM WHEEL 1

DMX Channel 33 @ Ext Mode	
Prism 1	8-facet circular
Prism 2	6-facet circular
Prism 3	6-facet linear
Prism 4	4-facet linear
Frost	Light 1°

This side facing light source

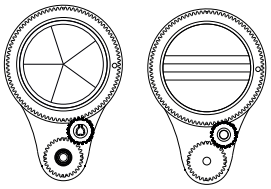

PRISM WHEEL 2

DMX Channel 36 @ Ext Mode	
Prism 1	16-facet circular
Prism 2	6-facet circular
Prism 3	6-facet linear
Prism 4	4-facet linear
Frost	Heavy 5°

This side facing light source

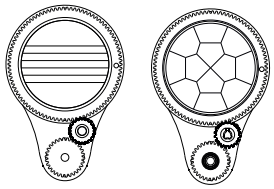

MULTIPLIER PRISMS 1, 3

DMX Channel 39 @ Ext Mode	
Prism 1	5-facet circular
Prism 3	5-facet linear

This side facing light source

MULTIPLIER PRISMS 2, 4

DMX Channel 39 @ Ext Mode	
Prism 2	7-facet linear
Prism 4	12-facet circular

This side facing light source

FIXTURE DRAWINGS

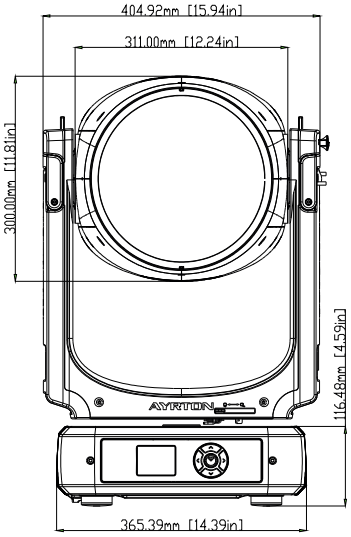

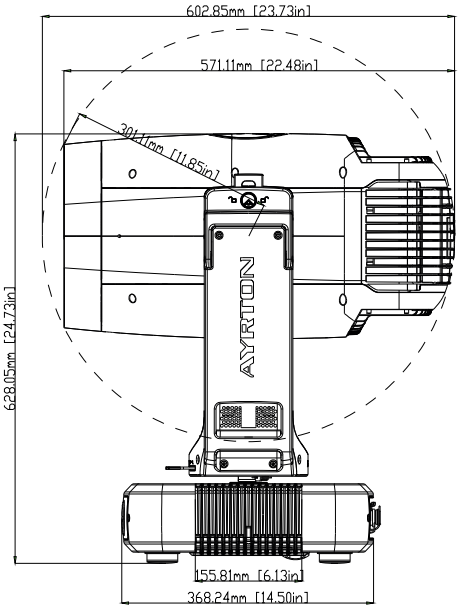

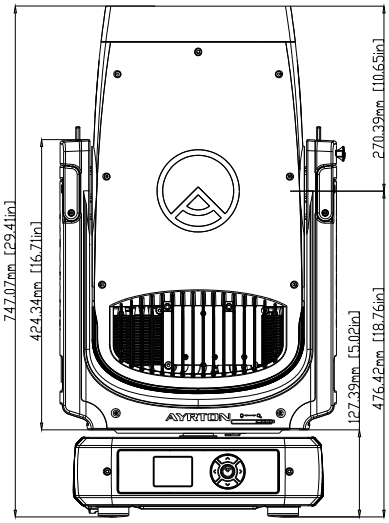

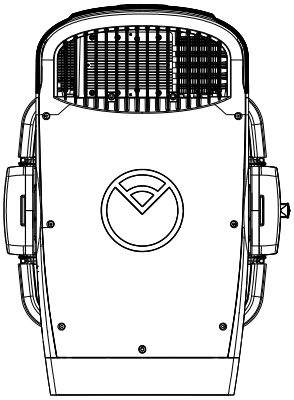

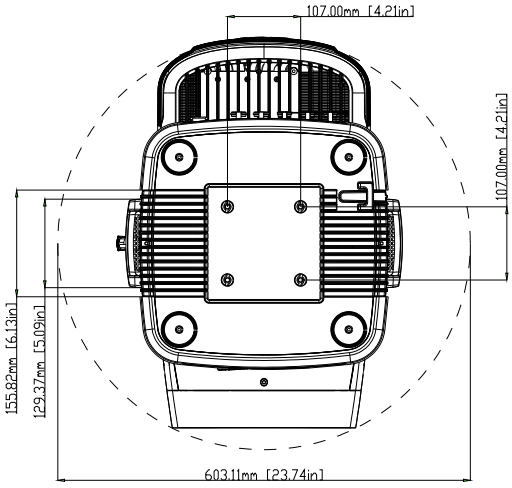

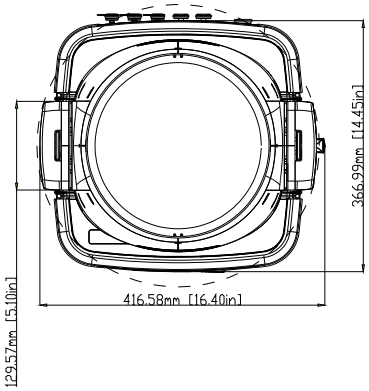

FOAM DRAWINGS

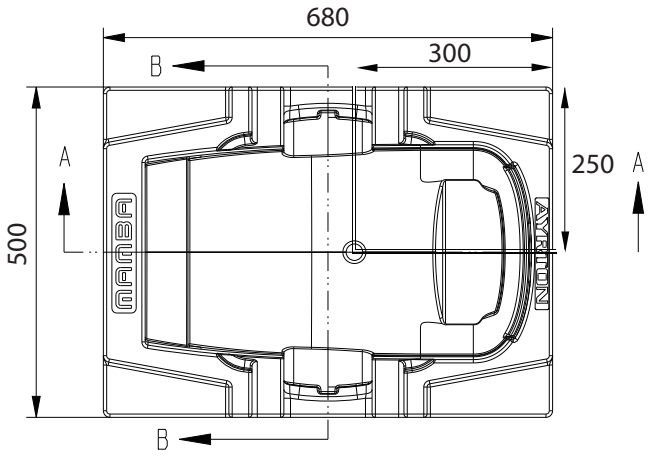

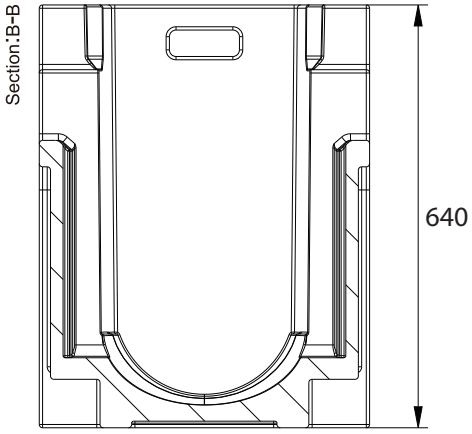

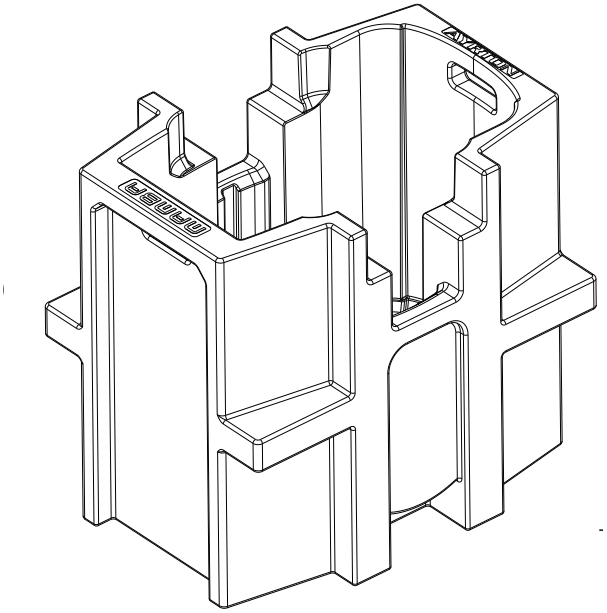

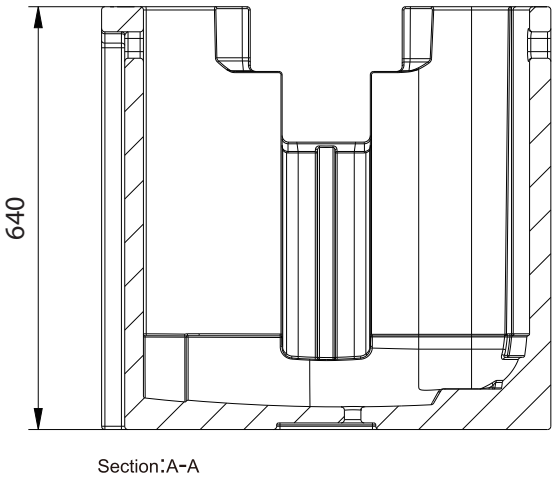

Dimension tolerance (mm): ± 5
Version: 1.0

⚠ DISCLAIMER

Errors and omissions for all information given in this document are possible. All information is subject to change without prior notice.