FIXTURE DIMENSIONS

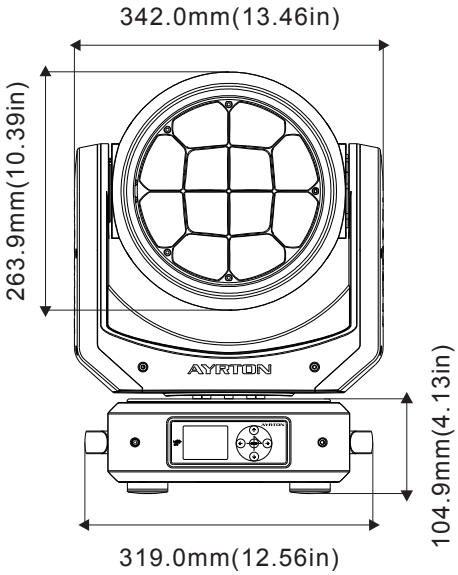

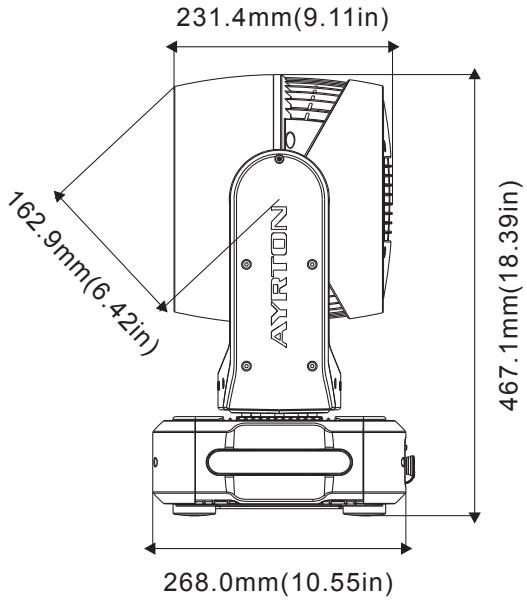

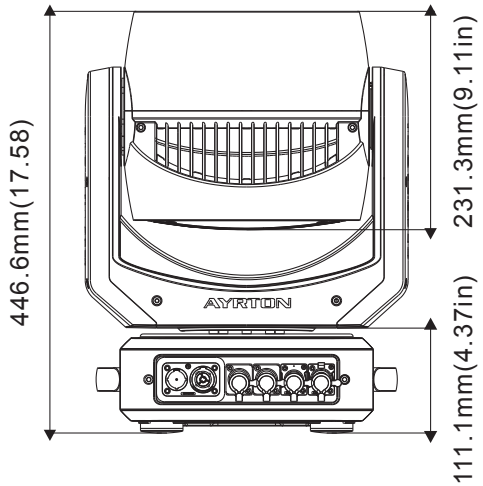

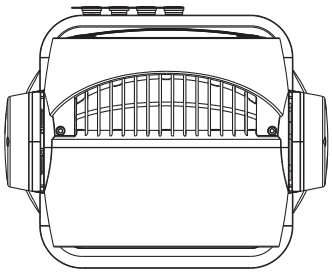

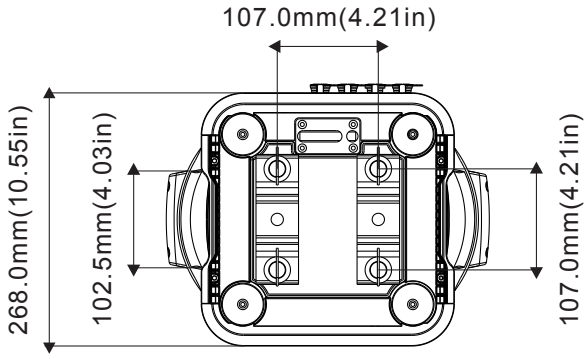

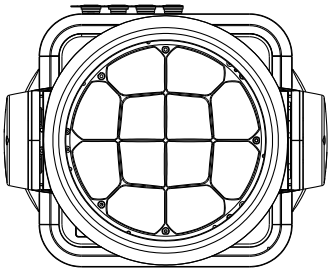

FOAM DIMENSIONS

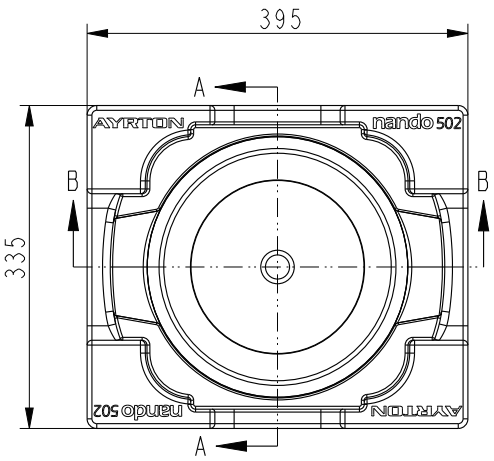

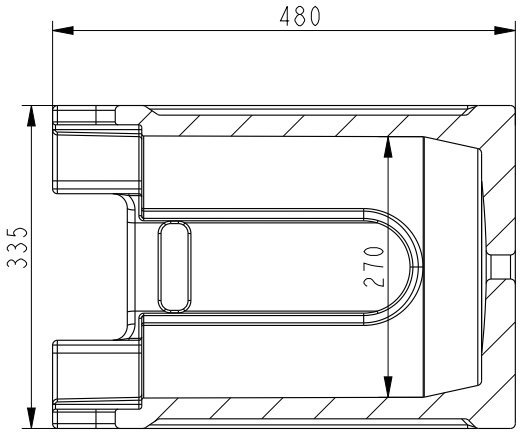

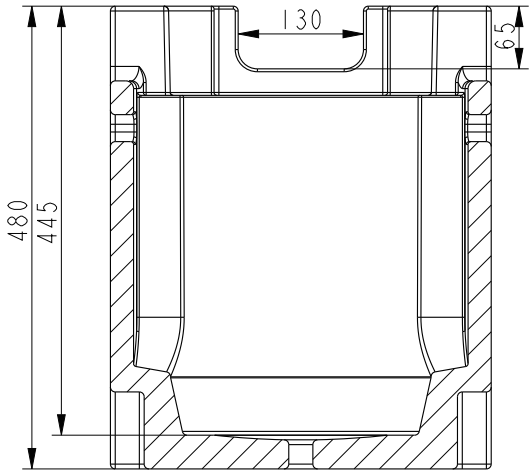

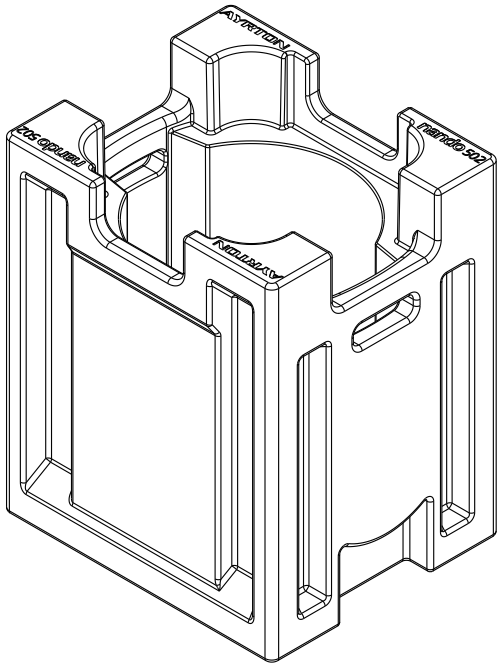

Dimension tolerance (mm): ± 5
Version: 1.0

ACCESSORIES DRAWINGS (OPTIONAL): TOP HAT

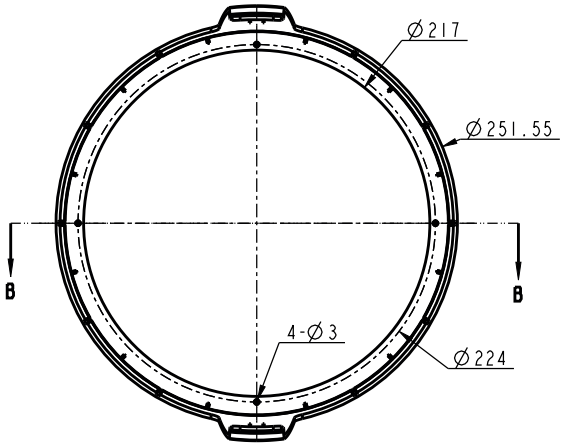

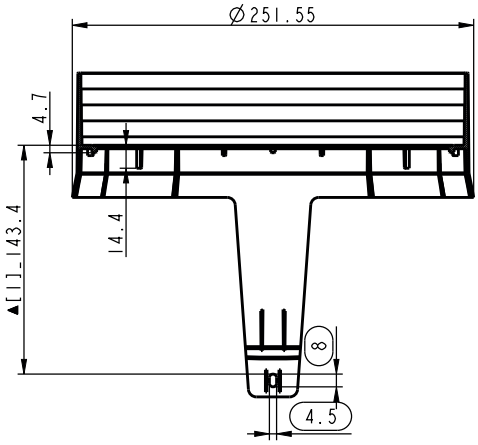

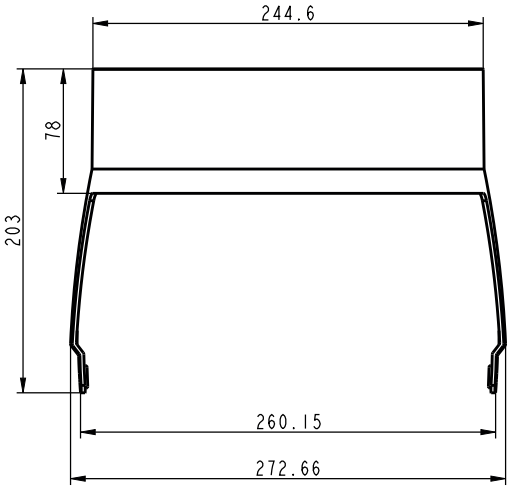

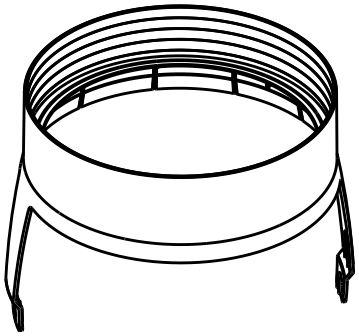

PIXEL FRONT VIEW 0°

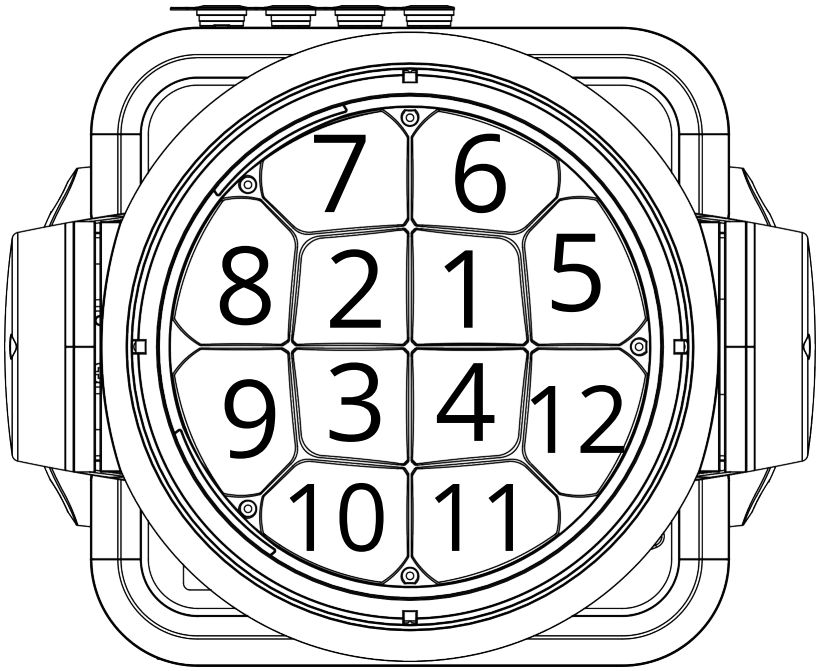

PIXEL FRONT VIEW 90°

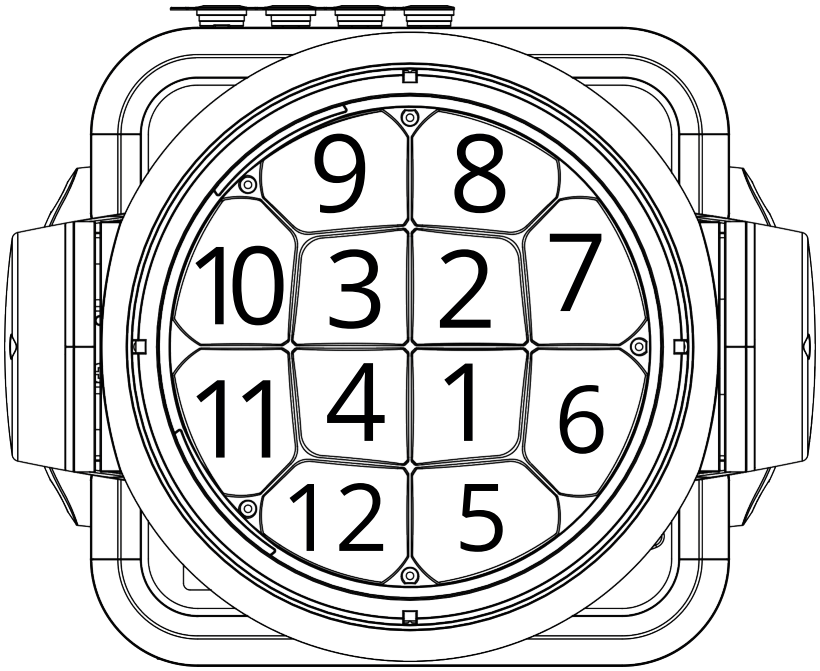

PIXEL FRONT VIEW 180°

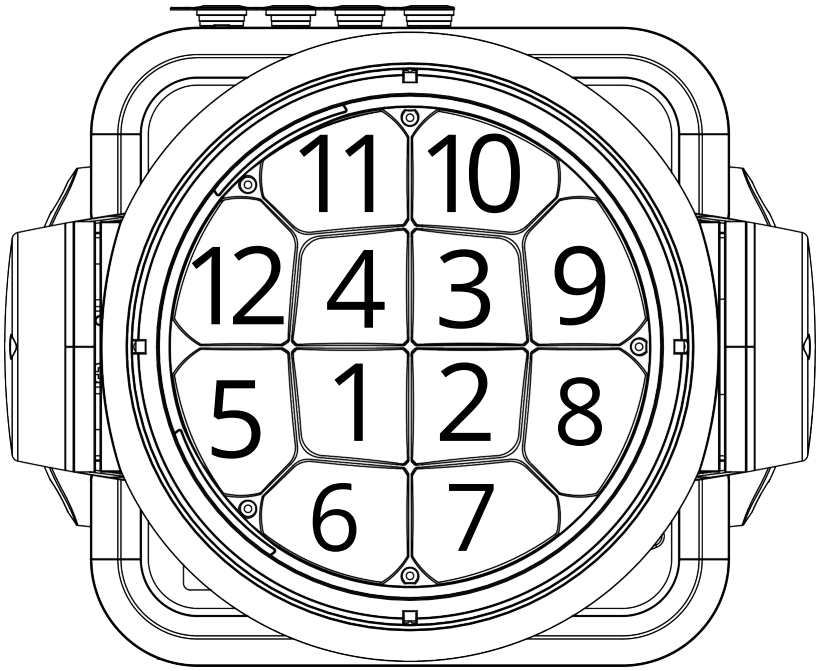

PIXEL FRONT VIEW 270°

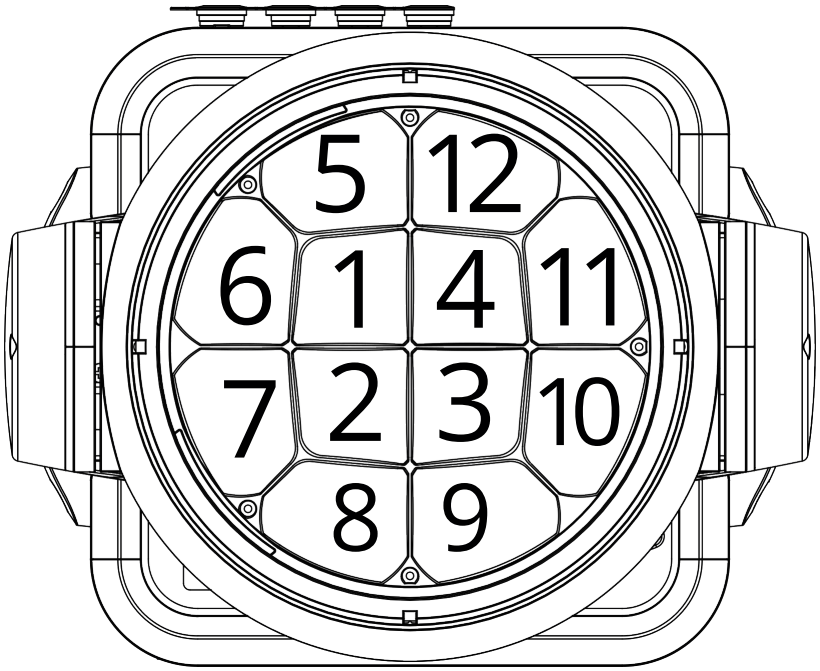

⚠ DISCLAIMER

Errors and omissions for all information given in this document are possible. All information is subject to change without prior notice.