USER MANUAL

ENGLISH - VERSION 117
Upd. 29/07/2026

nando 502
WASH

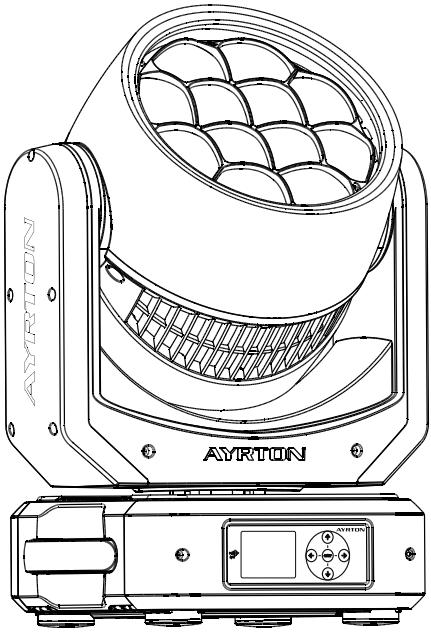

AYRTON
Digital Lighting

SCAN FOR MORE
ayrton.eu

2 Rue de Vitruve,
91140 Villebon-sur-Yvette,
France

CONTENTS

1. SAFETY INSTRUCTIONS 3

2. FEATURES 4

3. FIXTURE OVERVIEW 4

4. DRAWINGS 4

5. INSTALLATION INSTRUCTIONS 5

6. DMX-512 CONTROL CONNECTION 6

7. DMX-512 CONNECTION WITH DMX TERMINATOR 6

8. DEVICE DMX START ADDRESS SELECTION 6

9. OPERATING INSTRUCTIONS OF THE INTERNAL DMX WIRELESS SYSTEM 6

10. DISPLAY 6

11. NFC 10

12. DMX PROTOCOL 10

13. ERROR MESSAGES 10

14. CLEANING AND MAINTENANCE 11

Keep this manual for future needs.

Errors and omissions for all information given in this user manual are expected.
All information is subject to change without prior notice.

1. SAFETY INSTRUCTIONS

1.1 › IMPORTANT SAFETY WARNINGS

This device has left the factory in perfect condition. In order to maintain this condition and to ensure safe operation, it is absolutely necessary for the user to follow the safety instructions and warning notes written in this user manual.

In order to install, operate and maintain the lighting fixture safely and correctly we suggest that the installation and operation be carried out by qualified technicians and these instructions be carefully followed.

CAUTION	
	High voltage. Risk of severe or fatal electric shock.
	Always disconnect mains supply before removing any fixture covers.
	Never look directly into the light source. Sensitive persons may suffer an epileptic shock.
	Blue light hazard: risk group 2.
	Fixture exposed to salt water should not be stored in its foam insert without being cleaned with fresh water first. It is best practice that fixture bestored dry.
	Never touch the device during operation. covers may be hot.
	**Warning**: Changes or modifications to this unit not expressly approved by the party responsible for compliance could void the user's authority to operate the equipment. **Note:** This equipment has been tested and found to comply with the limits for a class a digital device, pursuant to part 15 of the fcc rules. These limits are designed to provide reasonable protection against harmful interference when the equipment is operated in a commercial environment. This equipment generates, uses and can radiate radio frequency energy and, if not installed and used in accordance with the instruction manual, may cause harmful interference to radio communications. Operation of this equipment in a residential area is likely to cause harmful interference in which case the user will be required to correct the interference at his own expense.

Damage caused by the disregard of this user manual is not subject to warranty. The dealer and manufacturer will not accept liability for any resulting defects or problems.

Under no circumstances should the fixture be pointed at the sun. Sunlight, combined with the high efficiency lenses used in the product can cause significant damage to the fixture.

Be aware that even when lens is not pointed directly at the sun damage may occur. It is best practice to ensure that the lens is pointed away from the sub, preferably in the opposite direction.

Always dry and clean your fixture before storing it for any length of time.

Never use any abrasive cleaning products on the fixture as this may damage the coating of the fixture impacting its anti-corrosion protection.

- If the device has been exposed to temperature changes due to environmental conditions, do not power on immediately. The resulting condensation could damage the device. Leave the device powered off until it has reached room temperature.
- Ensure the sealing rubber covers of powerCON TrueOne and XLR connectors are fitted properly when the device is not in use, to avoid water ingress.
- This device falls under protection-class I. Therefore, it is essential that the device be earthed.
- If either lenses or display are damaged (damage may include cracks or gashes in the material) they must be replaced.
- Electrical connections, such as replacing the power plug, must be performed by a qualified person.
- Make sure that the available voltage is not higher than that which is stated in this manual.
- Make sure the power cord is never crushed or damaged by sharp edges. If this should be the case, replacement of the cable must be done by an authorized dealer.
- If the external flexible power cord of this device is damaged, it shall be exclusively replaced by the manufacturer or their service agent or a similar qualified person in order to avoid injury.
- Before performing maintenance, always disconnect the device from the mains. Only handle the power cord from the plug. Never pull the plug out of a socket by tugging the power cord.
- When powered on for the first time, some smoke or smell may occur. This is caused by coating on metal parts when heated and is normal. If you are concerned, please contact your distributor.
- Do not focus the beam onto flammable surfaces. The minimum distance between the exiting lens of the device and the illuminated surface must be greater than 3 meters.

CAUTION

Please be aware that damage caused by any modifications to the device are not subject to warranty Keep away from children and non-professionals.

1.2 › GENERAL GUIDELINES

- This device is a lighting effect for professional use on stages, in discotheques, theatres, etc. The device was designed for indoor and outdoor use.
- This fixture is only allowed to be operated within the maximum alternating current as stated in the technical specifications in section 2 of this manual.
- Handle the device with care avoid shaking or using force when installing or maintaining the device.
- If you use the quick lock cam when rigging the device, make sure the quick lock fasteners are located in the quick lock holes correctly and securely.
- Operate the device only after having familiarized yourself with its functions Do not permit operation by persons not qualified for operating the device. Most damage is the result of unprofessional operation.
- Please use the original packaging if the device is to be transported.
- The applicable temperature for the device is between -20 °C to 45 °C. Do not use the device outside of this temperature range.
- The light source contained in this luminaire shall only be replaced by the manufacturer or his service agent or a similar qualified person.

CAUTION

For safety reasons, please be aware that all modifications to the device are forbidden. If this device is operated in any way different to the ones described in this manual, the product may suffer damage and the warranty becomes void. Furthermore, any other operation may lead to short-circuits, burns, electric shocks, etc.

2. FEATURES

POWER SUPPLY
- AC100-240 V~, 50/60 Hz
- Power Consumption: 550 W

OPTICS
- Beam aperture: 3.5° to 53°
- 210 mm front lens cluster

LIGHT SOURCE
- 12 x 40 W RGB-L High-Power LED sources
- CRI: Greater than 86

MOVEMENT
- Pan and tilt automatic repositioning
- Range: 540°/630° pan & 232° tilt

COLOURS
- Sophisticated 4 colours RGB-L mixing
- Virtual colour wheel, including most usual white colour temperature presets

EFFECTS
- 2D & 3D graphical effects capabilities
- Effects can be coupled with beam, wash or matrix applications
- Built-in pattern effects with speed and fade controls for scenic applications
- Individual control of each pixels

DIMMER / STROBE
- Electronic dimmer from 0 to 100%
- Strobe effect: 1 to 25 flashes per second

HARDWARE FEATURES
- Graphic LCD display with flip function
- 5 menu buttons to set functions
- Integrated wireless LumenRadio™ receiver
- IP65 XLR 5 pin connectors
- IP65 RJ45 connectors
- IP65 PowerCON TRUE1 TOP connectors
- Maximum Current available at the output: 16 A

CONTROL
- DMX 512 protocol
- DMX-RDM compatible
- Stand-alone mod, local control panel
- ArtNet™ & sACN protocol through Ethernet cable
- Choice of 4 DMX modes (26 to 86 DMX channels)

COOLING SYSTEM
- Advanced liquid cooling system
- Selectable ventilation user modes
- Excess temperature protection

HOUSING
- Skeleton made of aluminium and steel plates
- Base in die-cast aluminium
- Heatsinks in aluminium and copper
- Moulded covers ABS PC (V0 class)
- 2 sides handles for transportation
- 4 heavy-duty feet
- IP65 protection rating (IP66 optional)

INSTALLATION
- 2 Omega ¼ turn brackets
- 4 ¼ turn mounting points
- Safety cable attachment point

OPERATING PARAMETERS
- Maximum permitted: 45 °C (113 °F)
- Minimum permitted: -20 °C (-4 °F)
- Minimum usage distance: 3 m (9.84 ft)

COMPLIANCE
- CE, UKCA, ETL

SIZE
- Product: 342 x 467 x 268 mm (l x h x d)
- Foam: 395 x 480 x 335 mm (l x h x d)

WEIGHT
- Product: 15.6 kg

3. FIXTURE OVERVIEW

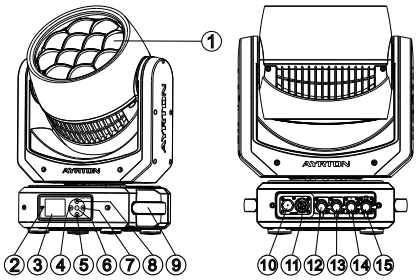

1. Lenses Assembly
2. NFC
3. Display
4. Left-button
5. Down-button
6. Center-button
7. Right-button
8. Up-button
9. Handle
10. Power In
11. Power Out
12. RJ45 In
13. RJ45 Out
14. DMX In
15. DMX Out

4. DRAWINGS

4.1 › FIXTURE DIMENSION

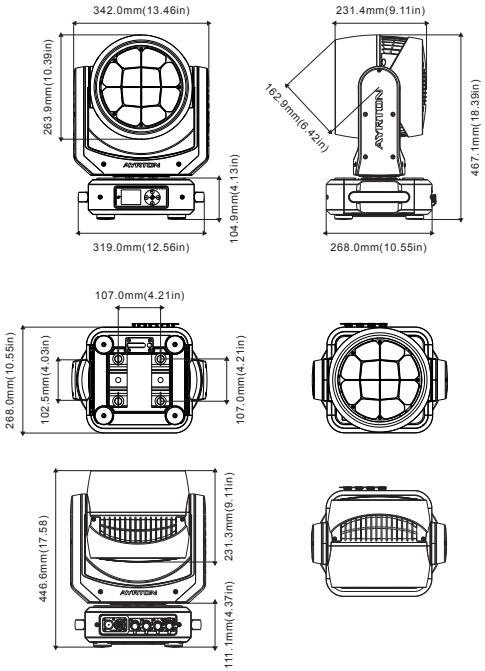

4.1 › OPTIONAL ACCESSORIES: TOP HAT

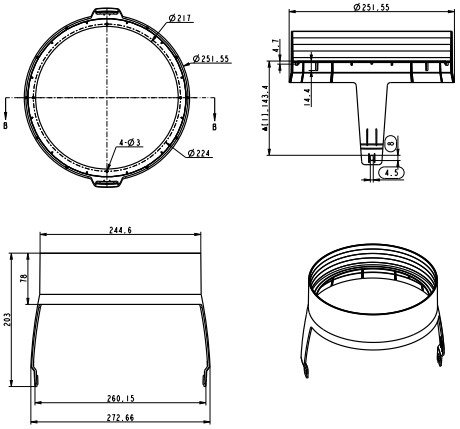

ACCESSORY	
Top Hat	GPP001848

5. INSTALLATION INSTRUCTIONS

5.1 › RIGGING THE DEVICE

CAUTION

Please consider the respective national norms during the installation. The installation must only be carried out by a qualified person

- The installation of the support structure has to be built and constructed in a way that it can hold 10 times the weight for 1 hour without any harming deformation.
- The installation must always be secured with a secondary safety attachment, e.g. an appropriate safety rope.
- Never stand directly below the device when mounting, removing or servicing the fixture.
- The operator has to make sure the safety relating and machine technical installations are approved by an expert before taking the device into operation for the first time.
- These installations have to be approved by a skilled person once a year.
- Overhead mounting requires extensive experience, including amongst others calculating working load limits, installation material being used, and periodic safety inspection of all installation material and the device. If you lack these qualifications, do not attempt the installation yo urself. Improper installation can result in bodily injury.

5.2 › RIGGING USING THE OMEGA BRACKETS

CAUTION

This step is very important to ensure safe rigging of the fixture.

- Fix the clamp to the bracket by tightening the M12 nut and bolt to the bracket through the Φ13 hole in the middle of the bracket.
- Insert the quick lock fasteners of the first Omega holder into the respective holes on the bottom of the device. Tighten the quick lock fasteners fully clockwise.
- Install the second Omega holder.
- Pull the safety cable through the holes on the bottom of the base and over the trussing system or another suitable rigging point.

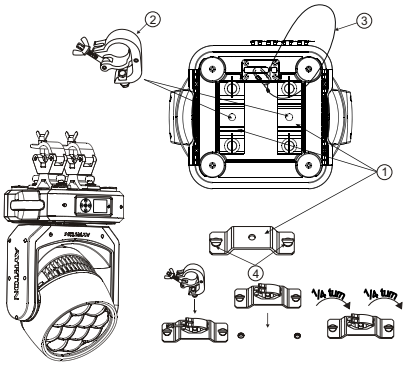

1. Omega bracket
2. Clamp
3. Safety rope
4. Quick-lock fastener

5.3 › RIGGING DRAWINGS

CAUTION

Overhead rigging requires extensive experience, including (but not limited to) calculating working load limits, specifying installation/rigging materials, and periodic safety inspection of all installation material as well as the device If you lack these qualifications, do not attempt the rigging of this device yourself. Improper installation/rigging can result in serious bodily injury

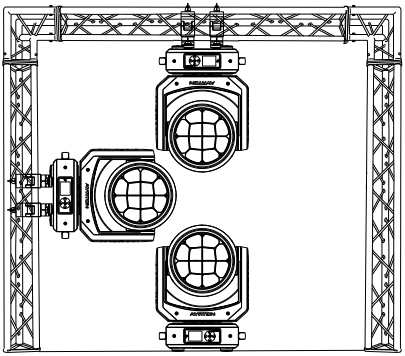

- Be sure this fixture is kept at least 0.1 m away from any flammable materials (decoration etc.).
- Always use and install a safety cable as a safety measure to prevent accidental damage and/or injury in the event the clamp fails.
- **WARNING! Always use and install original Ayrton accessories to ensure a safe installations and use of the unit. Ayrton WILL NOT be responsible for the use of third party accessories.**
- Rig the projector high enough to provide clearance for people who may walk beneath the beam path or establishing a restricted access area that extends beyond the beam hazard distance.
- **WARNING! Please DO NOT let other external intense lights to shine through the fixture front lens, it may cause significant internal damages!**
- When install fixture outdoor at day time (with power off), please make sure that the fixture front lens is NOT facing the sun.
- When use fixture outdoor at day time (with power on), please avoid fixture front lens facing the sun.
- When fixture is on standby outdoor at day time (with power ON and no DMX signal), please make sure the "sun protection" mode is ON (default).

6. DMX-512 CONTROL CONNECTION

Connect the provided male side of the XLR cable to the female XLR output of your controller and the female side of the XLR cable to the male XLR input of the device. You can connect multiple devices together in a serial fashion. The cable needed should be two core, screened cable with XLR input and output connectors. Up to 32 fixtures can be connected on a serial DMX link. Please refer to the diagram below.

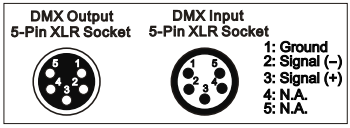

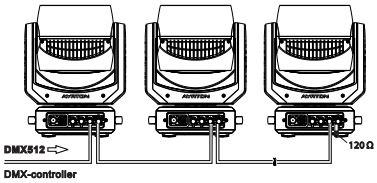

Address 1 Address 38 Address 75

7. DMX-512 CONNECTION WITH DMX TERMINATOR

For installations where the DMX cable has to run over a long distance or is in an electrically noisy environment, such as in a discotheque, it is recommended to use a DMX terminator. This helps in preventing corruption of the digital control signal caused by electrical noise. The DMX terminator is an XLR plug with a 120 Ω 0.25 Watt resistor connected between pins 2 and 3, which is then plugged into the output (female) XLR socket of the last fixture in the chain.
Please see illustrations below.

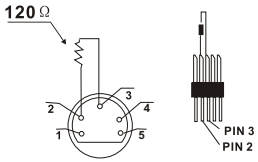

Note: If the link is divided into branches using a DMX splitter, terminate each branch of the link.

8. DEVICE DMX START ADDRESS SELECTION

All fixtures should be given a DMX starting address when using a DMX signal, so that the correct fixture responds to the correct control signals This digital starting address is the channel number from which the fixture starts to "listen" to the digital control information sent out from the DMX controller. The allocation of this starting address is achieved by setting the correct address number on the display located on the base of the device.

You can set the same starting address for all fixtures or a group of fixtures, or set different addresses for each fixture individually.

If you set the same address on all devices, all the devices will start to "listen" to the same control signal from the same channel number In other words, changing the settings of one channel will affect all the fixtures simultaneously.

If you set a different address, each unit will start to "listen to" the channel number you have set, based on the quantity of control channels of the unit. That means changing the settings of one channel will affect only the selected device.

In the case of the LED moving head, in 86 channel mode, you should set the starting address of the first unit to 1, the second unit to 87 (86+1), and the third unit 173 (86+87) and so on.

9. OPERATING INSTRUCTIONS OF THE INTERNAL DMX WIRELESS SYSTEM

9.1 › EQUIPMENTS

This product is equipped with a Lumen radio Timo DMX receiver.

9.2 › MESSAGE FROM THE LED INDICATOR

- Solid Green: Logged on to a transmitter and actively receiving DMX data.
- Solid Red: Not logged on to any transmitter (available) or not receiving DMX data.

9.3 › W-DMX IN THE MENU OF THE FIXTURE

In the shortcut menu, you'll find the option "Unlink W-DMX." Selecting this will disconnect the fixture from its current transmitter.

9.4 › SETTING UP THE WIRELESS SYSTEM

To connect the fixture to a transmitter, the transmitter must be in pairing mode. You can activate this mode by selecting "Unlink W-DMX" from the fixture's menu or by performing a factory reset on the fixture.

Once the transmitter is ready, press its pairing button to link the devices.

Important Notes:

- *After each job, please log out all receivers from the transmitter. This ensures the receivers return to an unassigned state and are ready for future pairings.*
- *Do not connect a fixture that is wirelessly linked to a transmitter to a DMX controller via cable. Doing so may cause signal interference.*

10. DISPLAY

- The LCD display with buttons is for addressing, special functions & parameters settings, local control, information query and etc...
- The main menu is accessed by double clicking (enter) button until the display starts flashing.
- Browse through the menu by pressing (^), (v), (<) or (>) button.
- Press (enter) for 2 seconds in order to exit menu, double click (enter) for confirm. After accessing the edit mode, the unit will automatically exit to the main menu after 15 seconds from the last button press.
- When the unit is powered on if no data signal is connected after 1 minute then the display will switch off automatically.

DEFAULT SETTINGS SHADED - V117

Address			
Main	DMX Address: XXX Decimal Universe: XXXXX Net: XX Sub-Net: XX Universe: X Signal		DMX Address Decimal Universe Net Sub-Net Universe DMX/WDMX/Art-Net/ sACN
Address			
Effect	FollowMain DMX Address: XXX Decimal Universe: XXXXX Net: XX Sub-Net: X Universe: X Signal		ON/OFF DMX Address Decimal Universe Net Sub-Net Universe DMX/WDMX/Art-Net/ sACN
Pwr LED Pix	FollowMain DMX Address:xxx Decimal Universe:xxxxx Net:xx Sub-Net:x Universe:x Signal		ON/OFF DMX Address Decimal Universe Net Sub-Net Universe DMX/WDMX/Art-Net/sACN
Mode			
User Mode	Stand Mode Basic Mode Extend Ring Extend Pixel		User's mode to change channel numbers
Options			
Status	No DMX Mode Sun Protection Pan Reverse Tilt Reverse Pan Degree Feedback Init PAN Init TILT Pan/Tilt Spd Zoom Spd Hibernation DMX Output Data Collect 4G/Wifi Wifi Info	Close/Hold/Auto ON/OFF ON/OFF ON/OFF 630/540 ON/OFF ON/OFF ON/OFF Fast/Medium/Slow Fast/Medium OFF, 01M ~ 99M, OFF ON/OFF Agree/Disagree Service Pin 4G/Wifi No/Yes	Auto run if no DMX Sun Protection Pan Reverse movement Tilt Reverse movement Pan Degree Select Movement Feedback Init PAN Init TILT Movement Speed Zoom Speed Standby Mode DMX Output Data Collect 4G/Wifi WiFi Info

Options			
Service PIN	Service PIN RDM UID Set IP Set Mask Reset From MAC DHCP Iot Lock Enable Cross Load SW Clr Error Info Set LED BIN	Password = XXX Xxxxxx xxx.xxx.xxx.xxx xxx.xxx.xxx.xxx ON/OFF ON/OFF ON/OFF ON/OFF ON/OFF BIN1/BIN2...	Service Password"=050" RDM IUD Set IP Set Mask Reset From Mac DHCP Iot Lock Enable Cross Load SW Clr Error Info Set LED BIN
Fans Control	Fans Speed	Auto Stage Silence Super Silence	Fans Speed select
	Constant Fans	ON/OFF	Constant Fans
Disp.Setting	Shutoff Time Flip Display Key Lock DispFlash	02~60m 05m ON/OFF ON/OFF ON/OFF	Display shutoff time Reverse 180 degree Key Lock DispFlash
Temp. C/F	Celsius Fahrenheit		Temperature switch between °C/°F
Initial Pos.	PAN =XXX		Initial effect position
Dim Curve	Square Law Linear		Dime Curve
Refresh Select	1.2K 2.4K 16K 25K		Refresh Select
Tungsten Lamp	OFF 500 W 1000 W 2500 W 5000 W		Tungsten Lamp
Pixel Rotation	0/90/180/270		Pixel Rotation
Defog	OFF/Auto/ON		Defog
CTC Mode	RGB/RGBL		CTC Mode
Main Screen	Address/RDM UID		Main Screen
Trigger	DMX Value Disp. Auto Program	PAN..... Leader/Alone	DMX Value Disp. Auto Program
Reset Default	ON/OFF		Restore factory set.
Reset Options	ON/OFF		Restore Options.
Reset User Set	Address	... the same as menu Address below	DMX address setting
	Mode	Stand Mode Basic Mode Extend Ring Extend Pixel	User's mode to change channel numbers
	Fans Speed	Auto Stage Silence Super Silence	Fans Speed select
	Constant Fans	ON/OFF	Constant Fans
Info			
Time Info.	Current Time Ttl Life Hrs Last Run Hrs LED Hours Current SW Hrs Timer PIN Clr Last Run		XXXX(Hours) XXXX(Hours) XXXX(Hours) XXXX(Hours) XXXX(Hours) Password = XXX ON/OFF
Temp. Info	XXX°C/°F		Temp. Info
Humidity	x%		Humidity
Fan Info.	xxxx RPM		Fan information

Info		
Software Ver	V1.0.....	Software version
Signal Quality	xxx	Signal quality
Network	IP, Mask, Mac	Network
Error Info.	Error Record 1 :	Error Info.
SN	xxxxx...	SN
Test		
Home	All Pan&Tilt ZOOM	Reset All Reset Pan&Tilt ZOOM
Test Channel	PAN	Test function
Manual Ctrl.	PAN =XXX :	Fine adjustment of the lamp
Calibration	-Password- PAN :	Password "050" Calibrate and adjust the effects to standard/right position
Pressure	Pressure Test Test Result Head/Base Pres	Pressure
Preset		
Select Prog.	Prog. Part 1 = Program 1 ~ 10 Program 1 Prog. Part 2 = Program 1 ~ 10 Program 2 Prog. Part 3 = Program 1 ~ 10 Program 3	Select programs to be run
Edit Prog.	Program 1 : Program 10	Program Test Step 01=SCxxx Step 64=SCxxx Testing program Program in loop Save and exit
Edit Scenes	Edit Scene 001 ~ Edit Scene 250	Pan,Tilt,..... --Fade Time-- --Scene Time-- Input By Outside Save and automatically return manual scenes edit
Scenes Input	XX~XX	Scenes Input

10.1 › ADDRESS

10.1.1. Main
With this function, you can adjust the DMX address, the Universe and the selection of the control signal.

10.1.2. Effect
With this function, you can adjust the DMX address, the Universe and the selection of the control signal

10.1.3. Pwr LED pix
With this function, you can adjust the DMX address, the Universe and the selection of the control signal

10.2 › MODE

10.2.1. User Mode
With this function, you can choose user defined channel orders.

10.3 › OPTIONS

10.3.1. Status

No DMX Status
With this function, you can choose the unit behavior in case no signal is detected between Close (all dmx value to 0), Hold (keep the last dmx value), and Auto (start auto mode).

Sun Protection
When this function is activated, the unit will automatically tilt down its head toward the ground when no signal is detected.

Pan Reverse
With this function you can reverse the Pan-movement.

Tilt Reverse
With this function, you can reverse the Tilt-movement.

Pan Degree
With this function, you can select the total Pan degree range between 630 or 540.

Feedback
This function allows you to activate or deactivate the automatic repositioning of the Pan & Tilt in case of an accidental/manual move of the yoke.

Init PAN
This function allows you to deactivate the Pan movement.

Init TILT
This function allows you to deactivate the Tilt movement.

Pan/Tilt Spd
This function allows you to select the Pan and Tilt speed from four options: Fast, Medium, Slow, FS Mode and Tracking 360.

Zoom Spd
With this function, you can select Zoom/Focus speed from "Fast", "Medium", "Slow".

Hibernation
The device and stepper motors will be powered off if the unit stays without DMX signal for the User defined times (in Minutes). The fixture will perform a reset sequence once DMX is back.

DMX Output
With this function, the unit can transmit the signal received via WDMX through the DMX output.

Data Collect
With this Function, you can activate the collection of data information for the IoT(The optional board is needed to use this option)

4G/Wifi
With this function, you can select between Wifi or 4G.

Wifi Info
This feature allows you to view the WiFi status and disconnect the current network using the «Clear» option.

10.3.2. Service PIN

Password
The Password for this function is "050".

RDM UID
With this function, you can display the RDM UID of the Unit

Set IP
This function allows you to set the IP of the Unit.

Set Mask IP
This function allows you to set the IP Mask of the Unit.

Reset From Mac
This function allows the Unit to take its IP automatically using its Mac address.

DHCP.
This function allows you to enable or disable the DHCP.

Iot Lock Enable
Enable or Disable the Iot Lock function (The optional board is needed to use this option)

Cross Load SW
This function allows you to upload the current SW version to other units using a DMX connection. Do not disconnect the units before the process is complete.

Clr Error Info
This function allows you to clear the error info list.

Set LED BIN
This function allows you to set the LED BIN of the LED Board.

10.3.3. Fans Control

Fans Speed
With this function, you can set the fans speed. Settings are Auto, Stage, Silence, and Super Silence.
- Auto: The LED module delivers **high** output and the fans ramp up and down depending on the ambient temperature and the temperature of the LED module itself.
- Stage: The LED module delivers **full** output and the fans remain at full speed regardless of the temperature of the LED module.
- Silence: The LED module is limited to **medium** output and the fans rotate at a slower speed.
- Super Silence: The LED module is limited to a **lower** output and the fans rotate at the slowest speed.

For specific output details, refer to photometry document.

Constant Fans
Enables you to set the fans to run continuously, even when the LED is off.

10.3.4. Disp. Setting

Shut off Time
With this function, you can select the delay before the LCD display turns off. Choose between 2 to 60 minutes. The default is 5 minutes.

Flip Display
With this function you can rotate the display by 180° (when the unit is rigged)

Key Lock
With this function you can activate the automatic key lock function. If this function is activated. the keys will be locked automatically after exiting the edit mode for 15 seconds. keeping press the ‹MODE/ESC› key for 3 seconds if you do not need this function.

DispFlash
With this function activated, display will flash if no signal is detected.

10.3.5. Temperature C/F
With this function you can display the temperature in Celsius or Fahrenheit.

10.3.6. Initial Pos.
With this function you can display initial effect position.

10.3.7. Dim Curve
With this function you can select the Dimmer Curve.

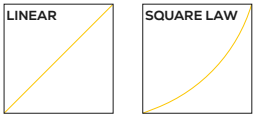

10.3.8. Refresh Select
With this function you can select the PWM rate.
- 1.2K & 2.4: provides superior dimming quality, especially for smooth fadeouts at lower levels
- 16K & 25K: are ideal for broadcast use

10.3.9. Tungsten Lamp
Provides a selection of tungsten emulation modes to replicate traditional lamp behavior. Available options: OFF, 500W, 1000W, 2500W, and 5000W. This affects dimming only, not colour shift.

10.3.10. Pixel Rotation
This menu allows you to choose the direction of pixel mapping in the unit between 0°/90°/180°/270°. For additional details, refer to the drawings file for Nando 502 Wash.

10.3.11. Defog
This function allows you to set the defog mode as follows:
- **ON:** Activates the defog fan (excluding the LED module cooling fans), sets the dimmer to full, and zoom to minimum. This function should only be used when necessary.
- **AUTO:** Activates the defog fan (excluding the LED module cooling fans) when temperature and humidity reach a certain level. Zoom and dimmer are not affected.
- **OFF:** No defogging actions are performed, the defog fan will not rotate and the heaters are turned off.

If ON or AUTO are selected, the heater plate will turn on when the unit is powered on. the Heater will turn on and off as necessary to maintain a constant internal temperature of 45°C.

10.3.12. CTC Mode
This function defines how the CTC channel works with the colour-control channels. Two modes are available:
- **RGB:** Nando 1202-compatible mode. Select a calibrated white point, then mix colour with RGB. Lime is managed automatically for better colour quality and CRI.
- **RGBL:** Legacy mode. CTC scrolls through preset colour temperatures from 2500K to 8000K.

10.3.13. Main Screen
This function allows you to choose which information is displayed on the main screen:
- **Address:** Displays the fixture's DMX address. This is the legacy display option.
- **RDM UID:** Displays the fixture's RDM UID, allowing it to be identified quickly.

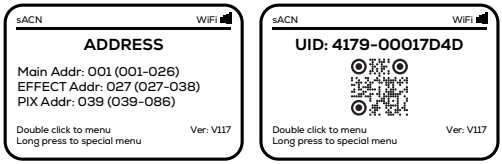

10.3.14. Trigger

DMX Value Disp.
With this function you can display the DMX 512 value of each channel. The display automatically shows the channel with a value changing.

Auto Program
With this function. you can run the internal program. You can select the desired program under "**Select program**". You can set the number of steps under "**Edit program**" . You can edit the individual scenes under "**Edit scenes**". With this function. you can run the individual scenes either automatically. i.e. with the adjusted Step-Time.

10.3.15. Reset Default
With this function, you can restore default setting (highlighted value in the above chart).

10.3.16. Reset Options
This function restores only the altered options settings (highlighted values in the chart above) to their default state.

10.3.17. Reset User
With this function, you can define the following "restore user" values:
- Address
- Mode
- Fans Speed
- Constant Fans

10.4 > INFO

10.4.1. Time Info.

Current Time
With this function. you can display the temporary running time of the device from the last power on. The display shows "XXXX". "XXXX" stands for the number of hours. The counter is reset after turning the device off.

Ttl Life Hrs
With this function. you can display the running time of the device. The display shows "XXXX". "XXXX" stands for the number of hours.

Last Run Hrs
With this function. you can display last the running time of the device. The display shows "XXXX". "XXXX" stands for the number of hours.

LED Hours
With this function. you can display the time of LED. The display shows "XXXX". "XXXX" stands for the time of LED.

Current SW Hrs.
With this function, you can read the software running time of the device. The display shows "XXXX", "XXXX" stands for the number of hours.

Timer PIN
With this function. you can display the timer password.

Clr Last Run
With this function. you can clear last run time of the fixture. The display shows "ON" or "OFF". Press "Enter" to confirm.

10.4.2. Temp.Info
With this function you can display the different temperature of the fixture.
- L: Light engine
- B: Base
- H: Head

10.4.3. Humidity
With this function you can display all the different humidity values available in the fixture
- B: Base
- H: Head

10.4.4. Fan Info.
With this function, you can display all the fan speed values available in the unit.

10.4.5. Software Ver
With this function, you can display the software version of the device.

10.4.6. Network
With this function, you can display the Network information.

10.4.7. Error Info
With this function, you can Read the error record of the Unit.

10.4.8. SN
With this function, you can display the serial number of the Unit

10.5 > TEST

10.5.1. Home
With this function you can reset the device. You can select which functions you want to reset by using the submenu.

10.5.2. Test Channel
With this function you can test each channel's function to ensure correct operation.

10.5.3. Manual Control
Allows you to manually control each feature of the unit.

10.5.4. Calibration
With this function. you can calibrate and adjust the effect wheels to their correct positions. The password of calibrate values is 050.

10.6 > PRESET

Run the auto program: A leader fixture can output to three different program signals to the follower fixture to operate. It means the host will send cyclically in the following orders. (The host will keep operating the program of Part 1). Then the follower fixture will make the selectively receiving according to its own set.



- If the follower fixture chooses Run For Follower 1 from the menu of 1-3,then it will receive the part 1's automatic program from link, in the same way, when the follower fixture chooses Run For Follower 2, then it will receive the part 2's automatic program from link.
- Enter the menu of 1-3 Function Mode---Set To Follower. Here to set machine operate which part of the program during the host-follow connection
- Enter the menu of 1-4, 1-5 Function Mode---Set To Leader
- Enter the menu of 8-1 Edit Program---Auto Program Part1. The host outputs three groups driven program---Part1, Part2, Part3 (Part1 program runs the same effect as the host)
- Enter the menu of 8-2 Edit Program---Edit Program. Edit the program's connection, connect the scene in order
- The editor of the scene, there are as many as 250 scenario editors, and every scene can have a program connection of 10.

Note:
Part 2, Part 3 repeat in accordance with the Part1's repeat. For example: When Part 1 uses Program 2, Part 2 uses Program 4, Part 3 uses Program 6, Assume:Program 2 includes scene of 10, 11, 12, 13. Program 4 includes scene of 8, 9, 10; Program 6 includes scene of 12, 13, 14, 15. Then it will run as below.

Example:

Part 1:

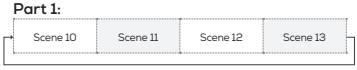

Part 2:

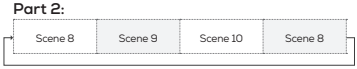

Part 3:



10.7 > SHORTCUT MENU

10.7.1. Flip display
With this function you can rotate the display by 180° (when the unit is rigged)

10.7.2. Restore Factory
With this function, you can restore default setting (highlighted value in the above chart).

10.7.3. Restore User
With this function, you can restore User settings (Setting can be edit under Options/Reset User Set).

10.7.4. Rst DMX addr 1
With this function you can only set the address to 1.

10.7.5. Rst Options
This function restores only the altered options settings (highlighted values in the chart above) to their default state.

10.7.6. Unlink WDMX
This function allows you to disconnect the fixture from its current WDMX transmitter.

10.7.7. Product SN
With this function, you can display the serial number of the Unit.

10.7.8. LED SN
With this function, you can display the serial number of the LED.

10.7.9. RDM UID
With this function, you can display the RDM UID of the Unit (Also QRCode)

10.7.10. Pressure
Under this menu, you can manage the pressure of the Unit :

- Pressure Test: Under this menu you can Run the Pressure test
- Test Result: Under this menu you can display the result of the last pressure test
- Head/Base Pres: Under this menu you can display the value of the Head and Base Pressure

11. NFC

When the fixture is powered on, you can use a NFC smartphone installed with the Ayrton App to scan the NFC tag area of the fixture to read some of the information or settings inside the display menu, such as product name, software version, UID, DMX Start Address, Universe, User Mode, Options, Information, etc. You can also change some of the settings and push to write inside the fixture menu.

When the fixture is not powered on, you can still use the App to read the NFC info and write the settings into the NFC tag, the written data will be automatically synchronized into the fixture menu at next time the fixture is powered on.

Link to download the application: https://qrstud.io/ayrtonnfc

Note:

- ***Before using, make sure there is NFC function on your smartphone and it is activated. Download and install the Ayrton App;***
- ***The NFC tag on the fixture is right under the LCD window;***
- ***The NFC reader area vary on different smartphones, identify the correct area on your smartphone before scanning the NFC tag on the fixture;***
- ***When scanning, make sure the NFC reader area of your smartphone close enough to the LCD window and hold still the smartphone for 3 seconds until reading successfully***

12. DMX PROTOCOL

Scan the QR code on the cover page to download the DMX CHART.

13. ERROR MESSAGES

When you turn on the device, it will first perform a reset. The display may show "Err channel is XX" should there be problems with one or more functions. "XX" stands for channel 1, 2, 3, 4, 5, 6 etc whose sensor has encountered a problem. For example, when the display shows "Err channel is Pan movement", it means there is an error on channel 1. If there are errors on channel 1, channel 3, channel 12 at the same time, you may see the error message, "Err channel is Pan movement", "Err channel is Tilt movement", "Err channel is Shutter", flash twice, and then the device will generate a second reset. If the error messages persist after performing a reset more than twice, the channels which have errors may not work properly however, all other functions can work as usual. Please contact your dealer or manufacturer for service. Self repair is not allowed.

PAN- movement Er

(PAN- movement error) This message will appear after the reset of the fixture if the yoke's magnetic-indexing circuit malfunction (Optical Sensor or Magnetic Sensor fails) or the stepper motor is defective (or its driving IC on the main PCB). The PAN- movement is not located in the default position after the reset.

TILT- movement Er

(TILT- movement error) This message will appear after the reset of the fixture if the head's magnetic-indexing circuit malfunctions (Optical Sensor or Magnetic Sensor fails) or the stepper motor is defective (or its driving IC on the main PCB). The TILT- movement is not located in the default position after the reset.

Zoom wheel Er

(Zoom wheel error) This message will appear after the reset of the fixture if the head's magnetic-indexing circuit malfunctions (Optical Sensor or Magnetic Sensor fails) or the stepper motor is defective (or its driving IC on the main PCB). The Zoom - movement is not located in the default position after the reset.

14. CLEANING AND MAINTENANCE

CAUTION	
	Disconnect from mains before starting maintenance operation
	Do not place the fixture with its lens/glass facing any people while doing the IP test!
	Never use alcohol or solvent to clean the lenses.
	Always run an IP test using the Ayrton IP test kit following any maintenance operation! Failure to comply with this clause will void the warranty!

To ensure that the cover is pressed evenly all around the seal, we recommend following the attached tightening order:

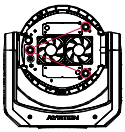

- ***Check the seal, it must be clean and undamaged, properly seated to avoid any damage when tightening.***
- ***First lightly tighten the screws into position and then tighten with a torque screwdriver.***

Torque value : 14Kgf.cm for metal cover or 7Kgf.cm for plastic cover.

The following points have to be considered during inspection:

- *All screws for installing the devices or parts of the device have to be tightly connected and must not be corroded.*
- *There must not be any deformations to the housing, lenses, rigging and installation points (ceiling, suspension, trussing).*
- *Motorized parts must not show any signs of wear and must move smoothly without issue.*
- *The power supply cables must not show any damage, material fatigue or sediment.*

Checking and replacing the desiccant

The desiccant is used as humidity indication in the fixture. Dry desiccant is in blue color, if it is saturated with water, its color changes to light red. If the desiccant color changes to pink, the desiccant is losing efficacy, it must be replaced.

CAUTION

Unplug the fixture from mains before checking or replacing desiccant!

Do not check or replace desiccant in a damp environment!

Further instructions depending on the installation location and usage have to be adhered to by a qualified installer and any safety concerns have to be removed. We recommend frequent cleaning of the device. Please use a moist, lint-free cloth. Never use alcohol or solvents. Please refer to the instructions under "Installation instructions".

Should you need any spare parts, please order genuine parts from your local dealer.

AYRTON

Digital Lighting

SCAN FOR MORE

ayrton.eu

2 Rue de Vitruve - 91140 - Villebon-sur-Yvette-France