RADIAL SGI STEREO TX|RX
(Stereo Instrument Line Driver)



- Item- and EAN-Number:
  - SGI-Stereo-System: 71073 | 676101047659 | Bundle SGI TX and SGI RX
  - SGI-Stereo-TX Transmitter: 71074 | 676101047666 | SGI TX single item
  - SGI-Stereo-RX Receiver: 71075 | 676101047673 | SGI RX single item
- Packaging Dimensions: 29.5 x 12 x 6.5 cm (bundle) | 16 x 10.5 x 7 cm (single item)
- Weight: 1.02 kg (bundle) | 0.51 kg (single item)
- Images | Translations | User Manual

Need to know for retailers

- Takes a pair of unbalanced instrument signals and allows you to drive it as far as 100 meters without noise or signal loss. Ideal for large stages and studio applications using stereo pedalboards.
- The SGI-Stereo-system consists of two units: the SGI-Stereo-TX Transmitter and the SGI-Stereo-RX Receiver.
- SGI-Stereo-TX and SGI-Stereo-RX are available either as a bundle (item xxxxx) or individually (SGI-TX: xxxxx/ SGI-RX: xxxxx).
- Connect your guitar or stereo pedalboard to the SGI-Stereo-TX input and your amplifiers to the SGI-Stereo-RX outputs. The connection between SGI-TX and SGI-RX is made via a standard Cat5 Ethernet cable, and you're ready to go.
- Application examples:
  - Studio: Allows guitarists to remain in the control room and actually hear what is coming through the studio monitors while they play.
  - Live: Allows guitarists to use long cable runs on stage while preserving tone and delivering a clean, noise-free signal to remote amps or isolation cabinets.

Feature List (SGI System RX & TX)

- Balanced stereo line driver system for stereo guitar pedals, pedalboards, or amp modelers
- Noise-free, lossless balanced transmission of two instrument signals up to distances of 100 meters
- Available as a bundle (SGI Stereo TX + SGI Stereo RX) or individual components
- Bundle consists of stereo receiver (SGI Stereo RX) and stereo transmitter (SGI Stereo TX)
- Connection between TX and RX via a single standard Cat5 Ethernet cable (not included)
- SGI Stereo TX: Dual 6.3 mm Hi-Z instrument inputs (L/R) and locking RJ45 etherCON output
- SGI Stereo RX: Locking RJ45 etherCON input and dual 6.3 mm outputs (L/R) for amplifier or pedalboard connection
- Prevents interference and signal loss caused by long cable runs and lighting systems
- Premium Jensen transformers for natural, transparent sound quality
- Ideal for studios, e.g. routing stereo guitar signals from control rooms to distant isolation booths
- Perfect for large stages and off-stage stereo amplifier setups
- Compatible with pedalboard-friendly power supplies from 9V to 18V (SGI Stereo TX)
- Receiver module (SGI Stereo RX) does not require its own power supply
- L/R Thru outputs (SGI Stereo TX) for feeding local amplifiers or direct boxes
- Ground Lift switches (SGI Stereo RX) reduce ground loop issues
- 180° polarity reverse switch on Left output (SGI Stereo RX) corrects phase issues between amplifiers
- Developed and manufactured by Radial Canada

Feature List (SGI-TX Transmitter only)

- Stereo transmitter module of Radial SGI Stereo line driver system
- Receiver module (SGI Stereo RX) required
- Noise-free, lossless balanced transmission of stereo instrument signals up to distances of 100 meters
- Dual 6.3 mm Hi-Z instrument inputs (L/R) for guitar, bass, and keyboards
- Locking RJ45 etherCON output
- Employs high-performance buffered circuitry for transmitting stereo signals over long distances
- Premium Jensen transformers for natural, transparent sound quality
- L/R Thru outputs for feeding local amplifiers or direct boxes
- Compatible with pedalboard-friendly power supplies from 9V to 18V
- Ideal for studios, e.g. routing stereo guitar signals from control rooms to distant isolation booths
- Perfect for large stages and remote stereo amplifier setups
- Developed and manufactured by Radial Canada

Feature List (SGI-RX Receiver only)

- Stereo receiver module of Radial SGI Stereo line driver system
- Transmitter module (SGI Stereo TX) required
- Noise-free, lossless balanced transmission of stereo instrument signals up to distances of 100 meters
- Locking RJ45 etherCON input
- Dual 6.3 mm outputs (L/R) for amplifier or pedalboard connection
- Receives, converts, and adjusts signal impedance for faithful stereo sound reproduction
- Premium Jensen transformers for natural, transparent sound quality
- Ground Lift switches reduce ground loop issues
- 180° polarity reverse switch on Left output for correcting phase cancellation
- Does not require its own power supply
- Ideal for studios, e.g. routing stereo guitar signals from control rooms to distant isolation booths
- Perfect for large stages and off-stage stereo amplifier setups
- Developed and manufactured by Radial Canada





Description

The SGI Stereo is a high-performance stereo line driver system for guitar and bass that takes two unbalanced instrument signals and allows them to be transmitted over long distances—completely free from noise or signal loss. By converting the signals to balanced transmission, the SGI Stereo delivers pristine stereo audio to remote amplifiers, isolation cabinets, or studio amp rooms.

Key Features:

- Balanced stereo line driver for guitar and bass
- Send stereo signals up to 100 meters (300 ft) without loss
- Premium Jensen transformers for optimal sound quality
- Delivers natural tone to off-stage stereo amplifiers
- Transmits analogue audio over a single Cat5 Ethernet cable

The SGI Stereo system is ideal for large stages where high-impedance instrument signals are often affected by the capacitance of long cable runs or interference from lighting systems. By balancing the stereo signal from a pedalboard or instrument setup, the SGI Stereo ensures clean, noise-free transmission—perfect for isolation cabinets, under-stage amplifiers, or remote “quiet” rooms.

In complex live setups, the SGI Stereo provides an elegant solution for managing stereo rigs. It allows guitarists to route stereo pedalboard outputs to remote amplifiers while maintaining tone, clarity, and phase integrity over long distances.

In the studio, the SGI Stereo is equally effective. Guitarists can remain in the control room and play while monitoring their sound through studio monitors, while the stereo guitar amplifiers are placed remotely in an isolation room—ensuring accurate monitoring and a comfortable recording environment.

The SGI Stereo system consists of two components:

- SGI Stereo TX (Transmitter)
- SGI Stereo RX (Receiver)

The connection between the SGI Stereo TX and RX is made using a single standard Cat5 Ethernet cable. Two unbalanced instrument signals are connected to the SGI Stereo TX, transmitted in balanced form, and converted back to unbalanced signals at the SGI Stereo RX for connection to amplifiers or pedals.

The SGI Stereo line driver system incorporates premium Jensen transformers to ensure optimal sound quality. These transformers provide excellent isolation, consistent frequency response, low noise, and minimal distortion—preserving the natural character of the instrument signals over long cable runs.

The SGI Stereo TX can be powered by standard pedalboard-friendly power supplies ranging from 9V to 18V. The SGI Stereo RX does not require its own power supply.

Additional features on the SGI Stereo RX include dedicated ground lift switches to reduce ground loop issues and a 180° polarity reverse switch on the left output to correct phase cancellation when using multiple amplifiers. The SGI Stereo TX features L/R thru outputs for feeding local amplifiers.

Applications

a) Using the Radial SGI Stereo in the studio

The SGI Stereo is the perfect interface for studio recording. Now, you can sit in the control room and play guitar and actually hear what is coming through the monitors while you play. Simply connect your guitar or pedalboard via two ¼" instrument cables to the TX, run a single standard Cat5 Ethernet cable to the RX, and crank to your heart's content!

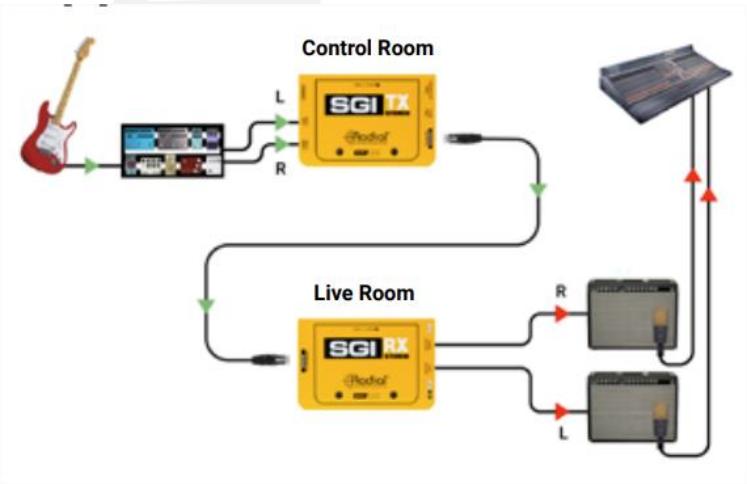

b) Using the Radial SGI Stereo on stage

The SGI Stereo is a ready-made solution for large stages where high-impedance guitar signals are often affected by the capacitance of long cables or noise due to lighting systems. The SGI Stereo balances the signal from your pedalboard and delivers it without noise. Perfect for isolation cabinets, under stage amps, or remote 'quiet' rooms.

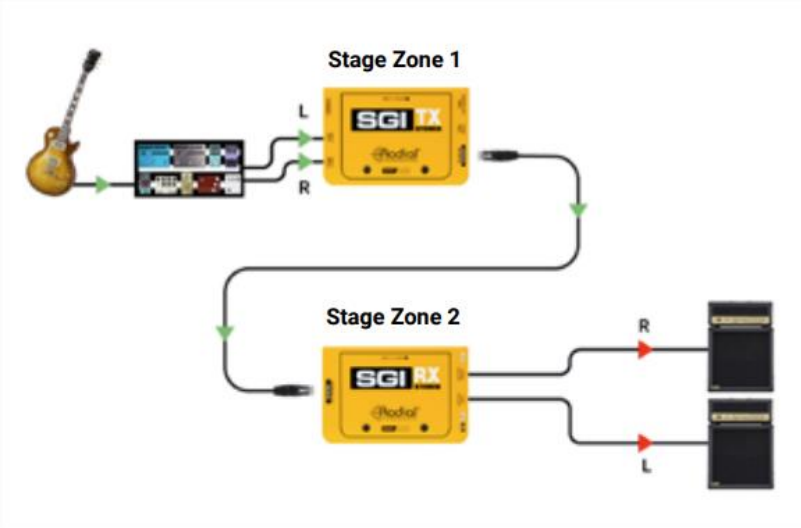

c) A solution to complex routing systems

The SGI Stereo system is a wonderful tool for helping manage complex setups on stage. You can also use an original SGI to route the signal from a wireless receiver to your pedalboard, then use a pair of SGI Stereo units to drive your stereo pedalboard output to remote guitar amplifiers and drive signals up to 100 meters without noise.

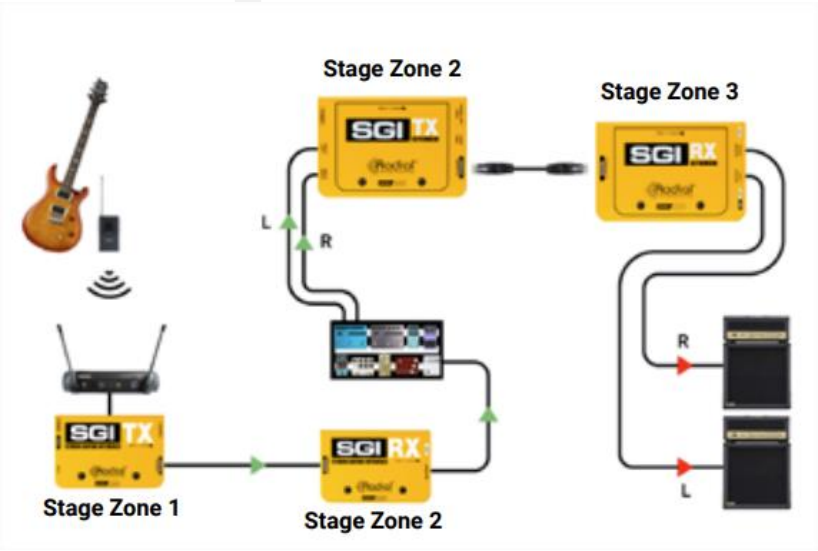

RADIAL SGI STEREO LINE-DRIVER-SYSTEM - B2B Download Link