FIXTURE DIMENSIONS

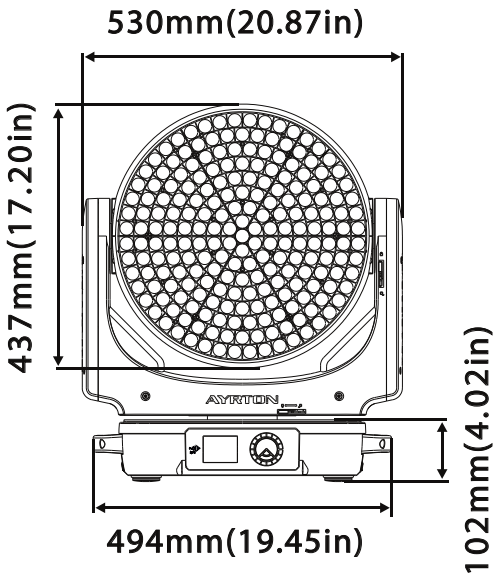

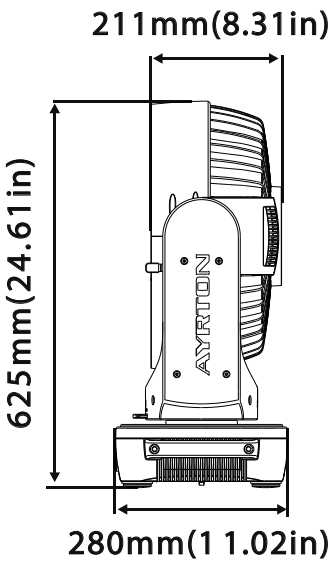

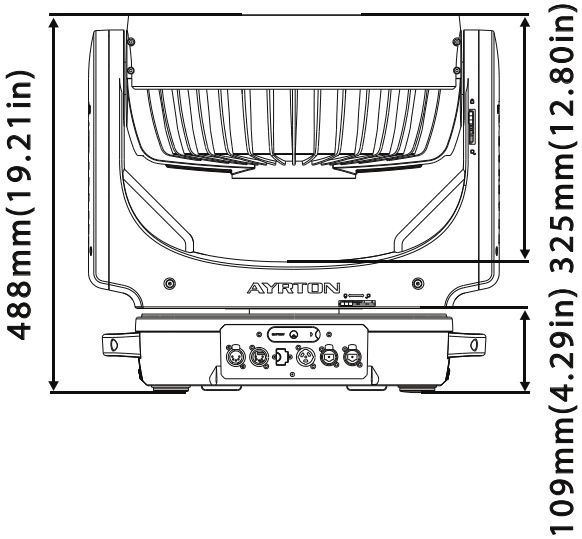

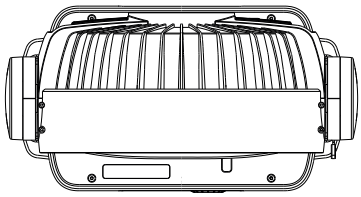

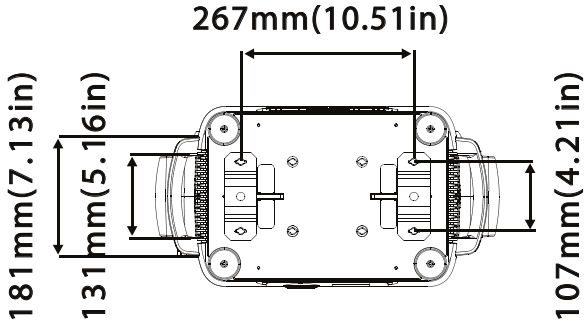

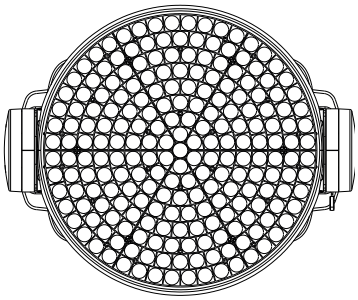

FOAM DIMENSIONS

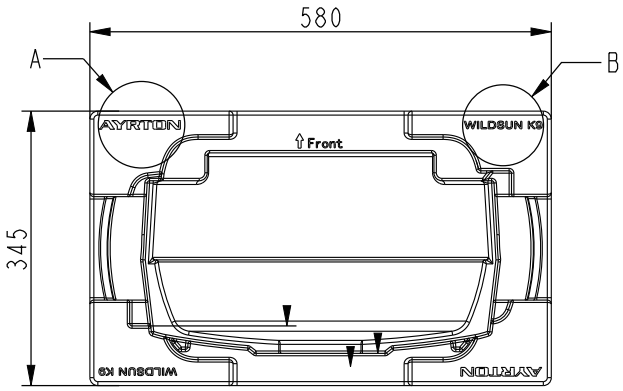

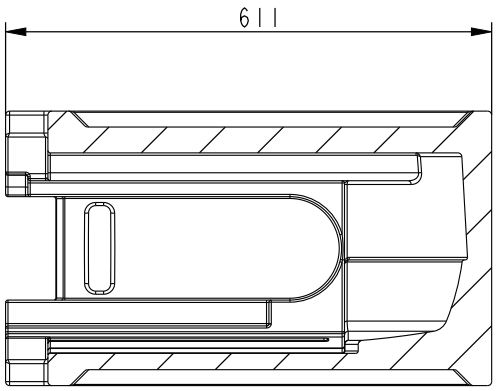

Section:B-B

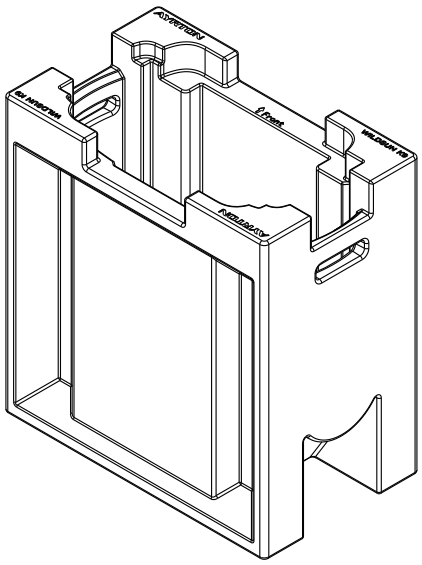

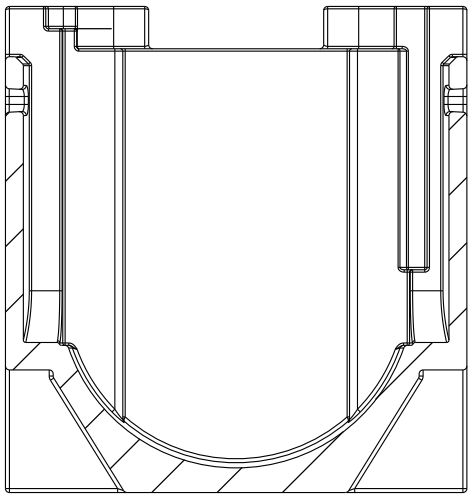

Section:A-A

Dimension tolerance (mm): ± 5
Version: 1.0

PIXEL FRONT VIEW

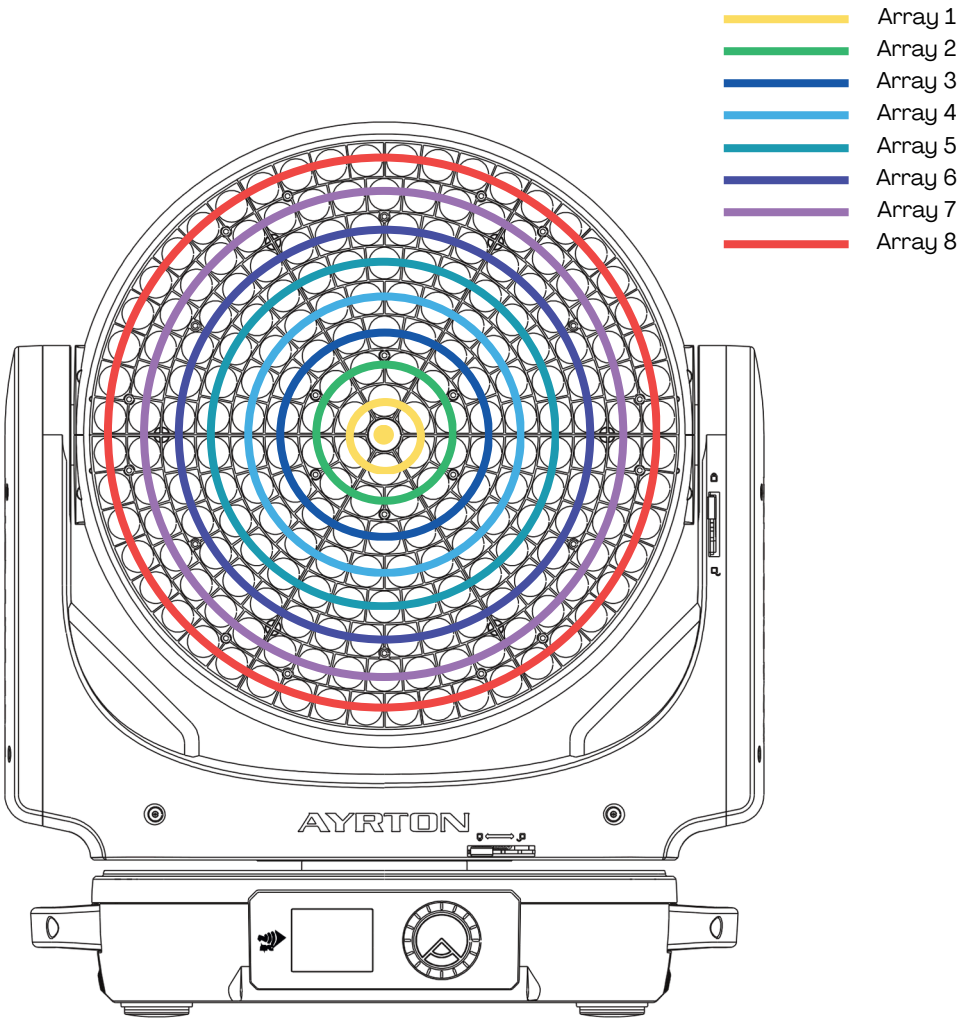

⚠ DISCLAIMER

Errors and omissions for all information given in this document are possible. All information is subject to change without prior notice.