# USER MANUAL

ENGLISH - VERSION 130

Rev. 16/03/2026

zonda 3 FX

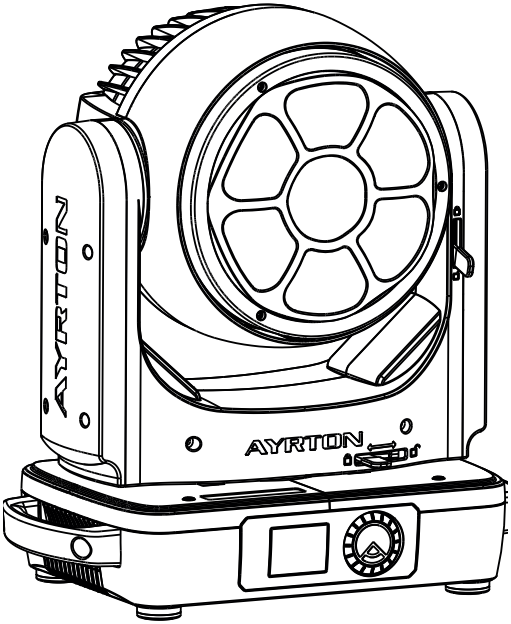


AYRTON

Digital Lighting

SCAN FOR MORE ayrton.eu

2 Rue de Vitruve,
91140 Villebon-sur-Yvette,
France

## CONTENTS

1. SAFETY INSTRUCTIONS ..... 3

2. FEATURES ..... 3

3. FIXTURE OVERVIEW ..... 4

4. DRAWINGS ..... 4

5. INSTALLATION INSTRUCTIONS ..... 5

6. DMX-512 CONTROL CONNECTION ..... 5

7. DMX-512 CONNECTION WITH DMX TERMINATOR ..... 5

8. DEVICE DMX START ADDRESS SELECTION ..... 6

9. OPERATING INSTRUCTIONS OF THE INTERNAL DMX WIRELESS SYSTEM ..... 6

10. DISPLAY ..... 6

11. NFC ..... 10

12. DMX PROTOCOL ..... 10

13. ERROR MESSAGES ..... 10

14. CLEANING AND MAINTENANCE ..... 11

Keep this manual for future needs.

Errors and omissions for all information given in this user manual are possible.
All information is subject to change without prior notice.

# 1. SAFETY INSTRUCTIONS

## 1.1 › IMPORTANT SAFETY WARNINGS

This device has left the factory in perfect condition. In order to maintain this condition and to ensure safe operation, it is absolutely necessary for the user to follow the safety instructions and warning notes written in this user manual.

In order to install, operate and maintain the lighting fixture safely and correctly we suggest that the installation and operation be carried out by qualified technicians and these instructions be carefully followed.

**CAUTION**

| | |
|---|---|
|  | High voltage. Risk of severe or fatal electric shock. |
|  | Always disconnect mains supply before removing any fixture covers. |
|  | Never look directly into the light source. Sensitive persons may suffer an epileptic shock. |
|  | Blue light hazard: risk group 2. |
|  | Never touch the device during operation. covers may be hot. |
|  | **Warning**: Changes or modifications to this unit not expressly approved by the party responsible for compliance could void the user's authority to operate the equipment.<br><br>**Note:** This equipment has been tested and found to comply with the limits for a class a digital device, pursuant to part 15 of the FCC rules. These limits are designed to provide reasonable protection against harmful interference when the equipment is operated in a commercial environment. This equipment generates, uses and can radiate radio frequency energy and, if not installed and used in accordance with the instruction manual, may cause harmful interference to radio communications. Operation of this equipment in a residential area is likely to cause harmful interference in which case the user will be required to correct the interference at his own expense. |

Damage caused by the disregard of this user manual is not subject to warranty The dealer and manufacturer will not accept liability for any resulting defects or problems.

- If the device has been exposed to temperature changes due to environmental conditions, do not power on immediately. The resulting condensation could damage the device. Leave the device powered off until it has reached room temperature.
- This device falls under protection-class I. Therefore, it is essential that the device be earthed.
- If either lenses or display are damaged (damage may include cracks or gashes in the material) they must be replaced.
- Electrical connections, such as replacing the power plug, must be performed by a qualified person.
- Make sure that the available voltage is not higher than that which is stated in this manual.
- Make sure the power cord is never crushed or damaged by sharp edges. If this should be the case, replacement of the cable must be done by an authorized dealer.
- If the external flexible power cord of this device is damaged, it shall be exclusively replaced by the manufacturer or their service agent or a similar qualified person in order to avoid injury.
- When the device is not in use or before performing maintenance, always disconnect the device from the mains. Only handle the power cord from the plug. Never pull the plug out of a socket by tugging the power cord.
- When powered on for the first time, some smoke or smell may occur. This is caused by coating on metal parts when heated and is normal. If you are concerned, please contact your distributor.
- Do not focus the beam onto flammable surfaces. The minimum distance between the exiting lens of the device and the illuminated surface must be greater than 0.5 meters.

**CAUTION**

**Please be aware that damage caused by any modifications to the device are not subject to warranty. Keep away from children and non-professionals.**

## 1.2 › GENERAL GUIDELINES

- This device is a lighting effect for professional use on stages, in discotheques, theatres, etc. The device was designed for indoor and outdoor use.
- This fixture is only allowed to be operated within the maximum alternating current as stated in the technical specifications in section 2 of this manual.
- Handle the device with care avoid shaking or using force when installing or maintaining the device.
- If you use the quick lock cam when rigging the device, make sure the quick lock fasteners are located in the quick lock holes correctly and securely.
- Operate the device only after having familiarized yourself with its functions. Do not permit operation by persons not qualified for operating the device. Most damage is the result of unprofessional operation.
- Please use the original packaging if the device is to be transported.
- The applicable temperature for the device is between -10 °C to 45 °C. Do not use the device outside of this temperature range.
- The light source contained in this luminaire shall only be replaced by the manufacturer or his service agent or a similar qualified person.

**CAUTION**

**For safety reasons, please be aware that all modifications to the device are forbidden. If this device is operated in any way different to the ones described in this manual, the product may suffer damage and the warranty becomes void. Furthermore, any other operation may lead to short-circuits, burns, electric shocks, etc.**

# 2. FEATURES

**POWER SUPPLY**

- AC100-240 V~, 50/60 Hz
- Power Consumption: 400 W

**OPTICS**

- 2 elements 14:1 zoom high-resolution optic system
- Beam aperture: 4° to 56°
- Fast motorised linear zoom
- 7 truncated edges 50 mm frontal lenses
- 170 mm front lens cluster

**LIGHT SOURCE**

- LED:
  - 7 pcs 4 in 1 RGBW LEDs

- 138 pcs MULTILED RGB
- Extremely long Life: >20,000 H

**MOVEMENT**

- Pan movement: 540 ° / 630 ° / 360 ° (16 bit)
- Tilt movement: 270 ° / 540 ° / 360 ° (16 bit)
- Pan and tilt automatic repositioning
- Range: Infinite pan and tilt rotation

**COLOURS**

- Excellent colour mixing and rainbow effect
- Sophisticated 4 colours RGBW mixed, reaching high Colour Rendering Index
- Uniform light beam with no colour shadows, and rich saturated and pastel colour-hues
- 4.29 billion colours (8-bit resolution)
- Virtual colour wheel, including most usuals white colour temperature presets

**EFFECTS**

- 2D & 3D graphical effects capabilities
- Effects can be coupled with beam, wash or matrix applications
- Built-in pattern effects with speed and fade controls for scenic applications
- Individual control of each pixels
- LiquidEffect™

**DIMMER / STROBE**

- Electronic dimmer from 0 to 100% without colour variation
- Strobe effect: 1 to 25 flashes per second

**HARDWARE FEATURES**

- Graphic LCD display for addressing and special functions settings, with flip function
- Clicking jog wheel to set functions
- Excess temperature protection
- Integrated wireless CRMX TiMo™ RDM receiver from LumenRadio™
- XLR 5 pin male and female connectors for DMX connection
- ethercon RJ45 IN / OUT connectors for ArtNet™ connection
- powerCON TRUE1 IN / OUT connectors for power connection
- Maximum Current available at the output: 16 A

**CONTROL**

- DMX 512 protocol, through DMX cable or wireless system
- DMX-RDM compatible
- Stand-alone mode and Master/Slave modes
- ArtNet™ & sACN protocol through Ethernet cable
- Local control panel, with LCD display
- Choice of 3 DMX modes (from 26 to 79 DMX channels)

**COOLING SYSTEM**

- Advanced cooling system
- Selectable ventilation user modes
- Excess temperature protection

**HOUSING**

- Skeleton made of aluminium and steel metal plates
- Base in die-cast aluminium
- Heatsinks in aluminium and copper
- Moulded covers ABS PC (V0 class)
- 2-side handles for transportation
- 4 heavy-duty feet for better stability
- IP20 protection rating

**INSTALLATION**

- 2 Omega ¼ turn brackets
- 4 ¼ turn mounting points
- Safety cable attachment point

**OPERATING PARAMETERS**

- Maximum permitted: 45°C (113°F)
- Minimum permitted: -10°C (14°F)
- Minimum usage distance: 0.5 m (1.64 ft)

**COMPLIANCE**

- CE, UKCA, ETL

**SIZE**

- Product: 365 x 404 x 233 mm (l x h x d)
- Foam: 420 x 438 x 280 mm (l x h x d)

**WEIGHT**

- Product: 11.1 kg

## 3. FIXTURE OVERVIEW

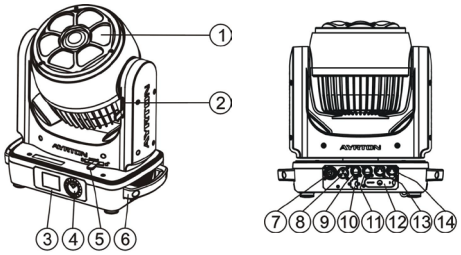


1. Lenses Assembly
2. Tilt Lock
3. Display
4. Jog Wheel
5. Pan Lock
6. Handle
7. Power In
8. Power Out
9. RJ45 In
10. USB
11. RJ45 Out
12. Battery
13. DMX In
14. DMX Out

## 4. DRAWINGS

### 4.1 › FIXTURE DIMENSION

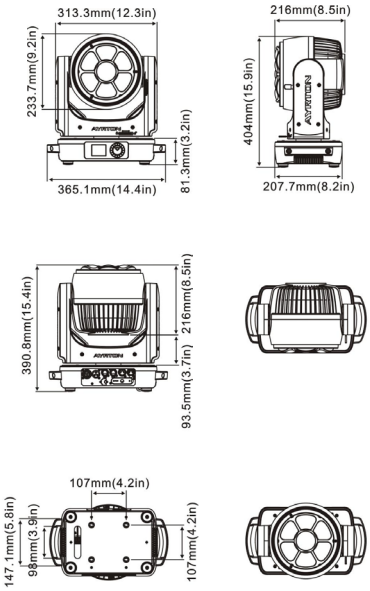

# 5. INSTALLATION INSTRUCTIONS

## 5.1 › RIGGING THE DEVICE

CAUTION

**Please consider the respective national norms during the installation. The installation must only be carried out by a qualified person.**

- The applicable temperature for the lighting is between -10 °C to 45 °C. Do not use the lighting under or above the temperature.
- The installation of the effect has to be built and constructed in a way that it can hold 10 times the weight for 1 hour without any harming deformation.
- The installation must always be secured with a secondary safety attachment, e.g.an appropriate safety rope.
- Never stand directly below the device when mounting, removing or servicing the fixture.
- The operator has to make sure the safety relating and machine technical installations are approved by an expert before taking the device into operation for the first time.
- These installations have to be approved by a skilled person once a year.
- Overhead mounting requires extensive experience, including amongst others calculating working load limits, installation material being used, and periodic safety inspection of all installation material and the device. If you lack these qualifications, do not attempt the installation yourself. Improper installation can result in bodily injury.

## 5.2 › RIGGING USING THE OMEGA BRACKETS

CAUTION

**This step is very important to ensure safe rigging of the fixture.**

- Fix the clamp to the bracket by tightening the M12 nut and bolt to the bracket through the Φ13 hole in the middle of the bracket.
- Insert the quick lock fasteners of the first Omega holder into the respective holes on the bottom of the device. Tighten the quick lock fasteners fully clockwise.
- Install the second Omega holder.
- Pull the safety cable through the holes on the bottom of the base and over the trussing system or another suitable rigging point. Insert the end into the carabiner and tighten the safety screw.

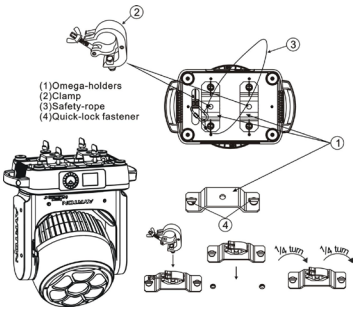


1. Omega bracket
2. Clamp
3. Safety rope
4. Quick-lock fastener

## 5.3 › RIGGING DRAWINGS

CAUTION

**Overhead rigging requires extensive experience, including (but not limited to) calculating working load limits, specifying installation/ rigging materials, and periodic safety inspection of all installation material as well as the device If you lack these qualifications, do not attempt the rigging of this device yourself. Improper installation/ rigging can result in serious bodily injury.**

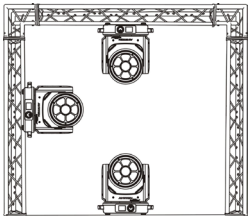

- Be sure this fixture is kept at least 0.1 m away from any flammable materials (decoration etc.).
- Always use and install a supplied safety cable as a safety measure to prevent accidental damage and/or injury in the event the clamp fails.
- **WARNING! Please DO NOT let other external intense lights to shine through the fixture front lens, it may cause significant internal damages!**
- When install fixture outdoor at day time (with power off), please make sure that the fixture front lens is NOT facing the sun.
- When use fixture outdoor at day time (with power on), please avoid fixture front lens facing the sun.
- When fixture is on standby outdoor at day time (with power ON and no DMX signal), please make sure the "sun protection" mode is ON (default).

# 6. DMX-512 CONTROL CONNECTION

Connect the provided male side of the XLR cable to the female XLR output of your controller and the female side of the XLR cable to the male XLR input of the device. You can connect multiple devices together in a serial fashion. The cable needed should be two core, screened cable with XLR input and output connectors. Up to 32 fixtures can be connected on a serial DMX link. Please refer to the diagram below.

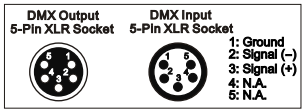


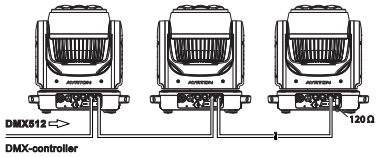


# 7. DMX-512 CONNECTION WITH DMX TERMINATION

For installations where the DMX cable has to run over a long distance or is in an electrically noisy environment, such as in a discotheque, it is recommended to use a DMX terminator. This helps in preventing corruption of the digital control signal caused by electrical noise. The DMX terminator is an XLR plug with a 120 Ω 0.25 Watt resistor connected between pins 2 and 3, which is then plugged into the output (female) XLR socket of the last fixture in the chain.
Please see illustrations below.

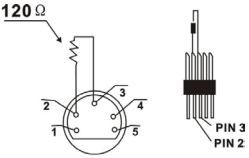


***Note: If the link is divided into branches using a DMX splitter, terminate each branch of the link.***

## 8. DEVICE DMX START ADDRESS SELECTION

All fixtures should be given a DMX starting address when using a DMX signal, so that the correct fixture responds to the correct control signals This digital starting address is the channel number from which the fixture starts to "listen" to the digital control information sent out from the DMX controller. The allocation of this starting address is achieved by setting the correct address number on the display located on the base of the device.

You can set the same starting address for all fixtures or a group of fixtures, or set different addresses for each fixture individually.
If you set the same address on all devices, all the devices will start to "listen to" the same control signal from the same channel number In other words, changing the settings of one channel will affect all the fixtures simultaneously.

If you set a different address, each unit will start to "listen to" the channel number you have set, based on the quantity of control channels of the unit. That means changing the settings of one channel will affect only the selected device.

In the case of the LED moving head, in 50 channel mode, you should set the starting address of the first unit to 1, the second unit to 51 (50 + 1), the third unit to 101 (50 + 51), and so on.

## 9. OPERATING INSTRUCTIONS OF THE INTERNAL DMX WIRELESS SYSTEM

### 9.1 › EQUIPMENTS

DMX 512 controller, wireless transmitter, and the fixtures with wireless receiver.

### 9.2 › MESSAGE FROM THE LED INDICATOR

- Rapid flashing red/Green: Logging in to a transmitter.
- Slow flashing Red/Green: Logged on a transmitter and the DMX line is idle (No DMX is connected to transmitter).
- Solid Green: Logged on to a transmitter and receiving DMX data.
- Solid Red: Not logged on to a transmitter (free).

### 9.3 › WDMX IN THE MENU OF THE FIXTURE

On a fixture installed with wireless system, in order to switch between wireless control system and traditional DMX control (with cable), a new menu WDMX is added to the display board.

**ON (Activate WDMX)**

- When the fixture is on power and the WDMX is activated to ON status, but did not connect to the controller and did not log in to the transmitter, the fixture will search for the DMX signal source. If the fixture is connected to the DMX controller it can be controlled by DMX controller; if it is log in to the wireless transmitter, it can be controlled by the Transmitter.
- When the fixture is power off, and the WDMX is in ON status, if the fixture is connected to DMX controller After the fixture is power on, it can be controlled only by the DMX controller which connected. The fixture can log in the wireless transmitter, and receive only radio signal from transmitter but not DMX from the transmitter.

**OFF (De-activate WDMX)**

- In this status, wireless system is not activated, so the fixture can not log in the transmitter.

**REST (Reset WDMX memory)**

- Can remove the fixture from the connection with the transmitter, the fixture become free and ready to log in any transmitter.

### 9.4 › SET UP THE WIRELESS SYSTEM

- Connect the transmitter with the DMX controller.
- To make the fixture installed with wireless receiver log in to the transmitter.
  - Initially the indicator on the receiver fixture should be in Solid red.
  - Press and hold the configuration button on transmitter for less than 3 seconds the red/green LEDs on the transmitter and the receiver fixture will flash rapidly for about 5~10 seconds while the system goes through its setup procedure.
  - Once the receiver fixture is logged in to the transmitter (T1), the fixture with wireless receiver will keep the memory, even if restart the power, this unit will log in the transmitter (T1) automatically.
- Use the DMX 512 to control the fixture.

### 9.5 › REMOVE THE RECEIVERS FROM TRANSMITTER (T1) AND TO LOG IN TO ANOTHER TRANSMITTER (T2)

**Case 1: Remove a receiver**

- On the control board of the fixture, enter menu to activated the function of REST.
- The LED for wireless on the fixture should turn to Solid red; the receiver can log out from the transmitter (T1).
- Press the configuration button on transmitter (T2) for less than 3 seconds, then the fixture will start to connect with the transmitter (T2).

**Case 2: Remove all receivers from a transmitter (T1) to log in to T2**

- Press and hold the configuration button on the T1 as least 5 seconds, can clear the connection with all the fixtures;
- All the red/green LEDs on the receiver fixtures will turn to Solid red to indicate that the receivers are unassigned and removed from the transmitter (T1);
- Press and hold the configuration button on the T2 less then less than 3 second, the fixtures will connect with the T2.

*PS:*

- ***Please log the receivers out from the transmitter after every job so that the receivers are in free un assigned state and ready to be assigned to a transmitter.***
- ***Do not connect the fixture which is under the communication of wireless system to the DMX controller, otherwise it will cause interference from the DMX controller.***

## 10. DISPLAY

- The Display offers Jog Wheel features: you can set the starting address run the pre-programmed program or reset the device.
- The main menu is accessed by double clicking Jog Wheel.
- Browse through the menu by turning Jog Wheel clockwise or counterclockwise.
- Double clicking in order to select the desired menu or long pressing to exit menu, double click the Jog wheel for confirm. After accessing the edit mode, the unit will automatically exit to the main menu after 15 seconds from the last button press. Clockwise is positive direction while counterclockwise is opposite direction.
- When the unit is powered on if no data signal is connected after 1 minute then the display will switch off automatically.
- The Display does not need external power to operate in case there is battery, hold down the Jog Wheel for 6 seconds and the Display will turn on by using the unit's battery.

*PS:*

- *No response when quick press the Jog Wheel.*

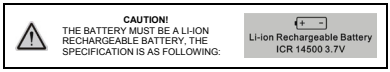


- *To install the battery for the first time, please make sure the unit is not connected to AC power. Install the battery in the battery holder, then remove the battery and install it back .*
- *This procedure must be done only for the first battery installation .*

## DEFAULT SETTINGS SHADED - V130

| | | | |
|---|---|---|---|
| **Address** | | | |
| **Main** | DMX Address: xxx<br>Decimal Universe: xxxxx<br>Net: xx<br>Sub-Net: xx<br>Universe: x<br>Signal: DMX/WDMX/Art-Net/sACN | | DMX Address<br>Decimal Universe<br>Net<br>Sub-Net<br>Universe<br>Dmx/WDmx/Artnet/sACN |
| **Effect** | FollowMain<br>DMX Address: xxx<br>Decimal Universe: xxxxx<br>Net: xx<br>Sub-Net: x<br>Universe: x<br>Signal: DMX/WDMX/Art-Net/sACN | | ON/OFF<br>DMX Address<br>Decimal Universe<br>Net<br>Sub-Net<br>Universe<br>Dmx/WDmx/Artnet/sACN |
| **Pwr LED pix** | FollowMain<br>DMX Address: xxx<br>Decimal Universe: :xxxxx<br>Net: xx<br>Sub-Net: x<br>Universe: x<br>Signal: DMX/WDMX/Art-Net/sACN | | ON/OFF<br>DMX Address<br>Decimal Universe<br>Net<br>Sub-Net<br>Universe<br>Dmx/WDmx/Artnet/sACN |
| **Liquid Effect** | Decimal Universe: xxxxx<br>Net: xx<br>Sub-Net: x<br>Universe: x<br>Signal: Art-Net/sACN | | Decimal Universe<br>Net<br>Sub-Net<br>Universe<br>Artnet/sACN |
| **Mode** | | | |
| **User Mode** | Stand Mode<br>Basic Mode<br>Extend Ring<br>Extend Pixel | | User's mode to change channel numbers |
| **Options** | | | |
| **Status** | No DMX Mode<br>Pan Reverse<br>Tilt Reverse<br>Pan Degree<br>Tilt Degree<br>Feedback<br>Init PAN<br>Init TILT<br>Pan/Tilt Spd<br><br>Hibernation<br>DMX Output | Close/Hold/Auto<br>ON/OFF<br>ON/OFF<br>630/540/360SC<br>270/540/360SC<br>ON/OFF<br>ON/OFF<br>ON/OFF<br>Fast/Medium/Slow/<br>Tracking360<br>OFF, 01M~99M, OFF<br>ON/OFF | Auto run if no DMX<br>Pan Reverse movement<br>Tilt Reverse movement<br>Pan Degree Select<br>Tilt Degree Select<br>Movement Feedback<br>Init PAN<br>Init TILT<br>Movement Speed<br><br>Stand by Mode<br>DMX Output |
| **Service PIN** | Service PIN<br>RDM UID<br>Set IP<br>Set Mask<br>Reset From Mac<br>DHCP<br>Cross Load SW<br>USB Update<br>Clr Error Info<br>Set LED BIN | Password = XXX<br>Xxxxxx<br>xxx.xxx.xxx.xxx<br>xxx.xxx.xxx.xxx<br>ON/OFF<br>ON/OFF<br>ON/OFF<br>ON/OFF<br>ON/OFF<br>CT4... | Service Password "=050"<br>RDM<br>Set IP<br>Set Mask IP<br>Reset From Mac<br>DHCP<br>Cross Load SW<br>USB<br>Clr LED Timer<br>LED BIN |

| | | | |
|---|---|---|---|
| **Options** | | | |
| **Fans Control** | Fans Speed | Auto<br>Stage<br>Silence<br>Super Silence | Fans Speed select |
| | Constant Fans | ON/OFF | Constant Fans |
| **Disp.Setting** | Shutoff Time<br>Flip Display<br>Key Lock<br>DispFlash | 02~60m 05m<br>ON/OFF<br>ON/OFF<br>ON/OFF | Display shutoff time<br>Reverse 180 degree<br>Key Lock<br>DispFlash |
| **Temp. C/F** | Celsius<br>Fahrenheit | | Temperature switch between °C / °F |
| **Initial Pos.** | PAN =XXX | | Initial effect position |
| **Wireless DMX** | Activate WDMX<br>Rest WDMX | | Activate WDMX<br>Rest WDMX |
| **Dim Curve** | Square Law<br>Linear | | |
| **Refresh Select** | 1.2K<br>2.4K<br>16K<br>25K | | Refresh Select |
| **Tungsten Lamp** | OFF<br>500W<br>1000W<br>2500W<br>5000W | | Tungsten Lamp |
| **Trigger** | DMX Value Disp.<br>Auto Program | PAN.....<br>Leader/Alone | DMX Value Disp.<br>Auto Program |
| **Reset Default** | ON/OFF | | Restore factory set. |
| **Reset User** | Address | ... the same as menu<br>Address below | DMX address setting |
| | Mode | Stand Mode<br>Basic Mode<br>Extend Ring<br>Extend Pixel | User's mode<br>to change<br>channel numbers |
| | Fans Speed | Auto<br>Stage<br>Silence<br>Super Silence | Fans Speed select |
| | Constant Fans | ON/OFF | Constant Fans |
| **Info** | | | |
| **Time Info.** | Current Time<br>Ttl Life Hrs<br>Last Run Hrs<br>LED Hours<br>Timer PIN<br>Clr Last Run | | XXXX(Hours)<br>XXXX(Hours)<br>XXXX(Hours)<br>XXXX(Hours)<br>Password = XXX<br>ON/OFF |
| **Temp. Info** | xxx ° C/ ° F | | XXX ° C/° F |
| **Fan Info.** | xxxx RPM | | Fan information |
| **Software Ver** | V1.0..... | | Software version |
| **Network** | IP, Mask, Mac | | Network |
| **Error Info.** | Error Record 1<br>. | | Error Info. |
| **SN** | xxxxx... | | SN |
| **Test** | | | |
| **Home** | All<br>Pan&Tilt<br>Zoom | | All<br>Pan&Tilt<br>Zoom |
| **Test Channel** | PAN ..... | | Test function |

| | | | |
|---|---|---|---|
| **Test** | | | |
| **Manual Ctrl.** | PAN = XXX<br>. | | Fine adjustment of the lamp |
| **Calibration** | -Password-<br>PAN<br>. | | Password "050"<br>Calbrate and adjust the effects to standard/right position |
| **Preset** | | | |
| **Select Prog.** | Prog. Part 1 = Program 1 ~ 10 Program 1<br>Prog. Part 2 = Program 1 ~ 10 Program 2<br>Prog. Part 3 = Program 1 ~ 10 Program 3 | | Select programs to be run |
| **Edit Prog.** | Program 1<br>.<br>Program 10 | Program Test<br>Step 01=SCxxx<br>Step 64=SCxxx | Testing program<br>Program in loop<br>Save and exit |
| **Edit Scenes** | Edit Scene 001<br>~ Edit Scene 250 | Pan,Tilt,.....<br>--Fade Time--<br>--Scene Time--<br>Input By Outside | Save and automatically return manual scenes edit |
| **Scenes Input** | XX~XX | | Scenes Input |

## 10.1 › ADDRESS

### 10.1.1. Address
With this function, you can adjust the DMX address, the Universe and the selection of the control signal.

### 10.1.2. Effect
With this function, you can adjust the DMX address, the Universe and the selection of the control signal.

### 10.1.3. Pwr LED pix
With this function, you can adjust the DMX address, the Universe and the selection of the control signal.

### 10.1.4. Liquid Effect
With this function, you can adjust the DMX address, the Universe and the selection of the control signal.

## 10.2 › MODE

### 10.2.1. User Mode
With this function, you can choose user defined channel orders.

## 10.3 › OPTIONS

### 10.3.1. Status

***No DMX Status***
With this function, you can choose the unit behavior in case no signal is detected between Close (all dmx value to 0), Hold (keep the last dmx value), and Auto (start auto mode).

***Pan Reverse***
With this function you can reverse the Pan-movement.

***Tilt Reverse***
With this function, you can reverse the Tilt-movement.

***Pan Degree***
With this function, you can select the total Pan degree range between 630, 540 or 360SC.

***Tilt Degree***
With this function, you can select the total Tilt degree range between 270, 540 or 360SC.

***360SC***
This mode limits the total range of movement (pan or tilt) to a maximum of 360 °. Since the fixture supports continuous rotation, it automatically selects the shortcut (SC) or fastest path between two position commands. For example, if transitioning from a pan position of 359 ° to 4 °, the fixture will take the direct route, preventing unnecessary flips or spinouts

***Feedback***
This function allows you to activate or deactivate the automatic repositioning of the Pan & Tilt in case of an accidental/manual move of the yoke.

***Init PAN***
This function allows you to deactivate the Pan movement.

***Init TILT***
This function allows you to deactivate the Tilt movement.

***Pan/Tilt Spd***
With this function, you can select Pan & Tilt speed from "Fast", "Medium", "Slow", "FS Mode", "Tracking 360".
- Tracking 360 Mode
  - Visual Feedback – When activated, the fixture will pan 90 degrees from its normal position to indicate the mode is enabled.
  - Pan & Tilt Adjustments – In this mode, the pan range is limited to 360 degrees with a shortcut (-180 ° to +180 °) for smoother control. The tilt range remains unchanged. Make sure the correct tilt setting is selected (default is 270 °, with an option for °540 °).
  - Enhanced Responsiveness – Acceleration and deceleration are optimised for quicker, more precise tracking performance.
- FS Mode
  - Enhanced Responsiveness – Acceleration and deceleration are highly reactive to improve tracking performance.

***Hibernation***
The device and stepper motors will be powered off if the unit stays without DMX signal for the User defined times (in Minutes). The fixture will perform a reset sequence once DMX is back .

***DMX Output***
With this function, the unit can transmit the signal received via WDMX or ArtNet/sACN through the DMX output.

***Encoder select***
This option allows you to choose the encoder for unit positioning (pan and tilt):
- Magnetic Encoder: Uses an Absolute encoder for faster resets, eliminating the need for a full reset spin.
- Photoelectric Encoder: Utilises a light sensor and optical encoder, requiring an end-stop rotation for calibration, resulting in a slower reset.

### 10.3.2. Service PIN

***Password***
The Password for this function is "050".

***RDM UID***
With this function, you can display the RDM UID of the Unit.

***Set IP***
This function allows you to set the IP of the Unit.

***Set Mask***
This function allows you to set the IP Mask of the Unit.

***Reset From Mac***
This function allows the Unit to take its IP automatically using its Mac address.

***DHCP.***
This function allows you to enable or disable the DHCP

***Cross Load SW***
This function allows you to upload the current SW version to other units using a DMX connection. Do not disconnect the units before the process is complete.

***USB Update***
This function allows you to update the fixture using an usb key connected to the back panel USB Connector.

*Clr LED Timer*
This function allows you to clear the error info list.

*Clr Error Info*
This function allows you to clear the error info list.

*Set LED BIN*
This function allows you to set the LED BIN of the LED Board.

**10.3.3. Fans Control**

*Fans Speed*
With this function, you can set the fans speed. Settings are Auto, Stage, Silence, and Super Silence.
- Auto: The LED module delivers **high** output and the fans ramp up and down depending on the ambient temperature and the temperature of the LED module itself.
- Stage: The LED module delivers **full** output and the fans remain at full speed regardless of the temperature of the LED module.
- Silence: The LED module is limited to **medium** output and the fans rotate at a slower speed.
- Super Silence: The LED module is limited to a **lower** output and the fans rotate at the slowest speed.

For specific output details, refer to photometry document.

*Constant Fans*
Enables you to set the fans to run continuously, even when the LED is off .

**10.3.4. Disp. Setting**

*Shut off Time*
With this function, you can select the delay before the LCD display turns off. Choose between 2 to 60 minutes. The default is 5 minutes.

*Flip Display*
With this function you can rotate the display by 180° (when the unit is rigged)

*Key Lock*
With this function you can activate the automatic key lock function. If this function is activated. the keys will be locked automatically after exiting the edit mode for 15 seconds. keeping press the ‹MODE/ESC› key for 3 seconds if you do not need this function.

*DispFlash*
With this function activated, display will flash if no signal is detected.

**10.3.5 Temperature C/F**
With this function you can display the temperature in Celsius or Fahrenheit.

**10.3.6. Initial Pos.**
With this function you can display initial effect position.

**10.3.7. Wireless**
From factory. this projector is prepared for wireless data transmission (W-DMX) .If you wish to de-activate W-DMX control. you can select the function “De-activate WDMX” by turning the encoder. With the function “Rest”, you can log out the projector from the wireless sender.

**10.3.8. Dim Curve**
With this function you can select the Dimmer Curve.

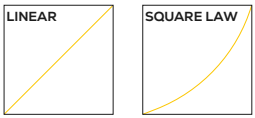


**10.3.9. Refresh Select**
With this function you can select the PWM rate.
- 1.2K & 2.4: provides superior dimming quality, especially for smooth fadeouts at lower levels
- 16K & 25K: are ideal for broadcast use

**10.3.10. Tungsten Lamp**
Provides a selection of tungsten emulation modes to replicate traditional lamp behavior. Available options: OFF, 500 W, 1000 W, 2500 W, and 5000 W. This affects dimming only, not colour shift.

**10.3.11. Trigger**

*DMX Value Disp.*
With this function you can display the DMX 512 value of each channel. The display automatically shows the channel with a value changing.

*Set to Alone*
With this function, you can define the device as Alone.

*Auto Program*
With this function. you can run the internal program. You can select the desired program under “**Select program**”. You can set the number of steps under “**Edit program**” . You can edit the individual scenes under “**Edit scenes**”. With this function. you can run the individual scenes either automatically. i.e. with the adjusted Step-Time.

**10.3.12. Reset Default**
With this function. you can select restore factory set for ON or OFF. the default is OFF.

**10.3.13. Reset User**
With this function, you can define the following “restore user” values:
- Address
- Mode
- Fans Speed
- Constant Fans

## 10.4 › INFO

**10.4.1. Time Info.**

*Current Time*
With this function. you can display the temporary running time of the device from the last power on. The display shows “XXXX”. “XXXX” stands for the number of hours. The counter is reset after turning the device off.

*Ttl Life Hrs*
With this function. you can display the running time of the device. The display shows “XXXX”. “XXXX” stands for the number of hours.

*Last Run Hrs*
With this function. you can display last the running time of the device. The display shows “XXXX”. “XXXX” stands for the number of hours.

*LED Hours*
With this function. you can display the time of LED. The display shows “XXXX”. “XXXX” stands for the time of LED.

*Timer PIN*
With this function. you can display the timer password.

*Clr Last Run*
With this function. you can clear last run time of the fixture. The display shows “ON” or “OFF”. Press “Enter” to confirm.

**10.4.2. Temp.Info**
With this function you can display the different temperature of the fixture.
- L: Light engine
- B: Base
- H: Head

**10.4.3. Fan Info.**
With this function, you can display all the fan speed values available in the unit.

**10.4.4. Software Ver**
With this function, you can display the software version of the device.

**10.4.5. Network**
With this function, you can display the Network information.

**10.4.6. Error Info**
With this function, you can Read the error record of the Unit.

## 10.5 › TEST

**10.5.1. Home**
With this function you can reset the device. You can select which functions you want to reset by using the submenu.

**10.5.2. Test Channel**
With this function you can test each channel's function to ensure correct operation.

**10.5.3. Manual Control**
Allows you to manually control each feature of the unit

**10.5.4. Calibration**
With this function. you can calibrate and adjust the effect wheels to their correct positions. The password of calibrate values is 050.

## 10.6 › PRESET

Run the auto program: A main fixture can output to three different program signals to the follow fixture to operate. It means the host will send cyclically in the following orders (The host will keep operating the program of Part 1) .Then the follow fixture will make the selectively receiving according to its own set.




- If the follow fixture chooses Run For Follow 1 from the menu of 1-3,then it will receive the part 1's automatic program from link, in the same way, when the follow fixture chooses Run For Follow 2, then it will receive the part 2's automatic program from link.
- Enter the menu of 1-3 Function Mode---Set To Follow. Here to set machine operate which part of the program during the host-follow connection
- Enter the menu of 1-4, 1-5 Function Mode---Set To Main
- Enter the menu of 8-1 Edit Program---Auto Program Part1. The host outputs three groups driven program---Part1, Part2, Part3 (Part1 program runs the same effect as the host)
- Enter the menu of 8-2 Edit Program---Edit Program. Edit the program's connection, connect the scene in order
- The editor of the scene, there are as many as 250 scenario editors, and every scene can have a program connection of 10.

***Note:***
***Part 2, Part 3 repeat in accordance with the Part1's repeat. For example: When Part 1 uses Program 2, Part 2 uses Program 4, Part 3 uses Program 6, Assume:Program 2 includes scene of 10, 11, 12, 13. Program 4 includes scene of 8, 9, 10; Program 6 includes scene of 12, 13, 14, 15. Then it will run as below.***

***Example:***

Part 1:




Part 2:

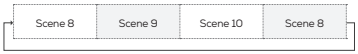


Part 3:




## 10.7 › SHORTCUT MENU

**10.7.1. Flip display**
With this function you can rotate the display by 180° (when the unit is rigged)

**10.7.2. Restore Factory**
With this function, you can restore default setting (highlighted value in the above chart).

**10.7.3. Restore User**
With this function, you can restore User settings (Setting can be edit under Options/Reset User Set).

**10.7.4. Rst DMX addr 1**
With this function you can only set the address to 1.

# 11. NFC

When the fixture is powered on, you can use a NFC smartphone installed with the Ayrton App to scan the NFC tag area of the fixture to read some of the information or settings inside the display menu, such as product name, software version, UID, DMX Start Address, Universe, User Mode, Options, Information, etc. You can also change some of the settings and push to write inside the fixture menu.
When the fixture is not powered on, you can still use the App to read the NFC info and write the settings into the NFC tag, the written data will be automatically synchronized into the fixture menu at next time the fixture is powered on.

Link to download the application: https://qrstud.io/ayrtonnfc

***Note:***

- ***Before using, make sure there is NFC function on your smartphone and it is activated, Download and install the Ayrton App;***
- ***The NFC tag on the fixture is right under the LCD window;***
- ***The NFC reader area vary on different smartphones, identify the correct area on your smartphone before scanning the NFC tag on the fixture;***
- ***When scanning, make sure the NFC reader area of your smartphone close enough to the LCD window and hold still the smartphone for 3 seconds until reading successfully.***

# 12. DMX PROTOCOL

***Scan the QR code on the cover page to download the DMX CHART.***

# 13. ERROR MESSAGES

***When you turn on the device, it will first perform a reset. The display may show "Err channel is XX" should there be problems with one or more functions. "XX" stands for channel 1, 2, 3, 4, 5, 6 etc whose sensor has encountered a problem. For example, when the display shows "Err channel is Pan movement", it means there is an error on channel 1. If there are errors on channel 1, channel 3, channel 8 at the same time, you may see the error message, "Err channel is Pan movement", "Err channel is Tilt movement", "Err channel is Shutter", flash twice, and then the device will generate a second reset. If the error messages persist after performing a reset more than twice,***

***the channels which have errors may not work properly however, all other functions can work as usual. Please contact your dealer or manufacturer for service. Self repair is not allowed.***

**PAN- movement Er**

(PAN- yoke movement error) This message will appear after the reset of the fixture if the yoke's magnetic-indexing circuit malfunction (Optical Sensor or Magnetic Sensor fails) or the stepper motor is defective (or its driving IC on the main PCB). The PAN-movement is not located in the default position after the reset.

**TILT- movement Er**

(TILT- head movement error) This message will appear after the reset of the fixture if the head's magnetic-indexing circuit malfunctions ((Optical Sensor or Magnetic Sensor fails)) or the stepper motor is defective (or its driving IC on the main PCB). The TILT-movement is not located in the default position after the reset.

**Zoom wheel Er**

(Zoom wheel error) This message will appear after the reset of the fixture if the head's magnetic-indexing circuit malfunctions (Optical Sensor or Magnetic Sensor fails) or the stepper motor is defective (or its driving IC on the main PCB). The Zoom -movement is not located in the default position after the reset.

## 14. CLEANING AND MAINTENANCE

The following points have to be considered during inspection:

- All screws for installing the devices or parts of the device have to be tightly connected and must not be corroded.
- There must not be any deformations to the housing, lenses, rigging and installation points (ceiling, suspension, trussing).
- Motorized parts must not show any signs of wear and must move smoothly without issue.
- The power supply cables must not show any damage, material fatigue or sediment.

Further instructions depending on the installation location and usage have to be adhered to by a qualified installer and any safety concerns have to be removed.

**CAUTION**



Disconnect from mains before starting maintenance operation

In order to ensure the device remains in good condition and does not fail prematurely, we suggest regular maintenance.

- Clean the inside and outside lens each week to avoid loss of output due to accumulation of dust/ dirt on the lens.
- Clean the fans each week to ensure maximum airflow and efficient thermal cooling.This will ensure the light source is operated in the best possible condition.
- A detailed electrical check by an approved electrician every quarter to make sure that the circuit contacts are in good condition.This will prevent poor circuit contacts and the resultant overheating.

We recommend frequent cleaning of the device. Please use a moist, lint- free cloth. Never use alcohol or solvents.

Please refer to the instructions under"Installation instructions".
Should you need any spare parts, please order genuine parts from your local deale

AYRTON

Digital Lighting

SCAN FOR MORE

ayrton.eu

2 Rue de Vitruve - 91140 - Villebon-sur-Yvette - France