User Manual [E-CONN]

Table of contents

- WELCOME
- SAFETY INFORMATION
- PRODUCT OVERVIEW
  - Dimension
    - 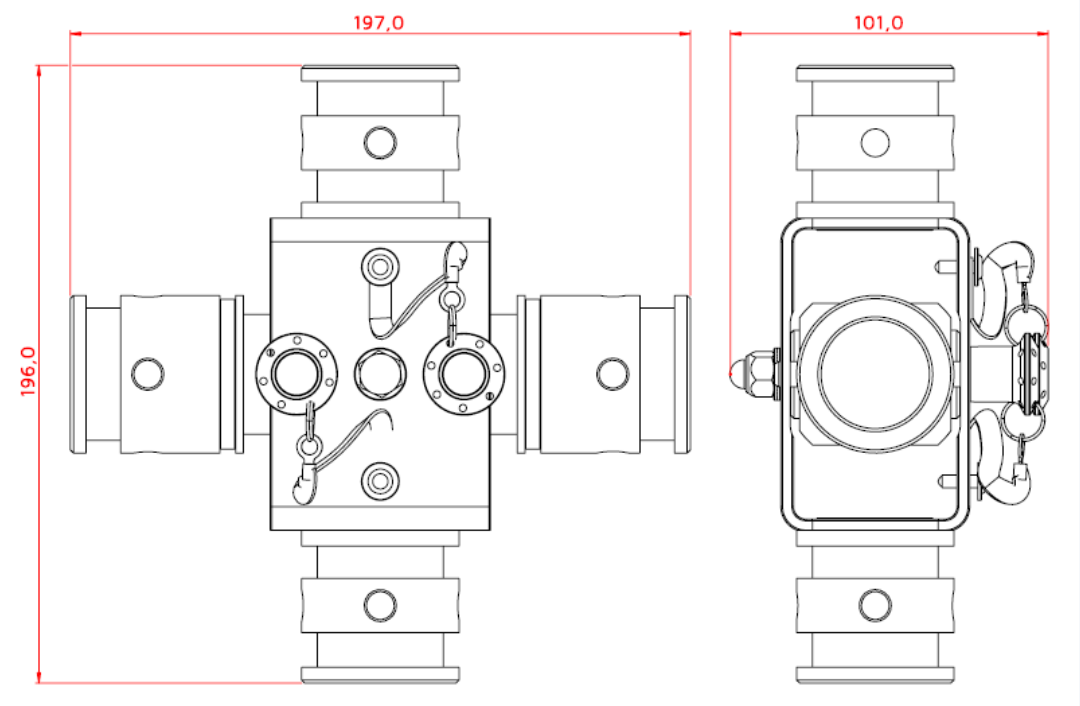

    -
    - Kit content (what’s in the box)– E-CONN™
    - Optional accessories (not included)
- PREPARATION FOR USE
  - Installation

- CONNECTING LUMINAIRES TO E-CONN™

WELCOME

Dear User,

Thank you for choosing **Portman E-CONN™** – the original product with a registered design.
We are proud to deliver you the highest quality, greatest design and real passion with our product.
Each fixture in the Portman portfolio is different, yet all of them ensure you the best performance to support your creativity.

FOR YOUR SAFETY, PLEASE READ THIS USER MANUAL CAREFULLY BEFORE YOUR INITIAL START-UP!

Please remember:

- any updates on this document,
- current products' libraries,
- current products' firmware,
- RMA procedure

can be found on our webpage in the support area:
www.support.portmanlights.com

SAFETY INFORMATION

WARNING! This product is for professional use only! It is not for household use.

This product presents a risk of lethal or severe injury due to heat, electric shock, fire or falls.
Intense and flashing light could trigger epileptic seizures. Read this manual before your initial start-up and follow the safety information in this manual and engraved on the fixture.

Every person involved in the installation, service and maintenance of this device must be qualified and have experience in working with stage lighting fixtures.

Before your initial start-up, please make sure that there is no damage caused by transportation.
Should there be any, consult your dealer and do not use the device.

Please consider that damages caused by manual modifications to the device are not subject to warranty.

CAUTION! Be careful with your operations! Never exceed the maximum load of the arms.

Protection against fails

• Use only original Portman accessories and fixtures when connecting the E-CONN™.

• Ensure that the structure intended for installation can hold at least 10 times the weight of all installed devices.

• Ensure that all fixtures are attached correctly to the structure and use an approved means of secondary attachment such as a safety cable.

• Block access below the work area whenever installing or removing the fixture.

• Never use the E-CONN™ as a structure for hanging other fixtures. It was designed to work only with Portman EVO ELEMENT™ and Portman P2 EVO™.

PRODUCT OVERVIEW

Dimension

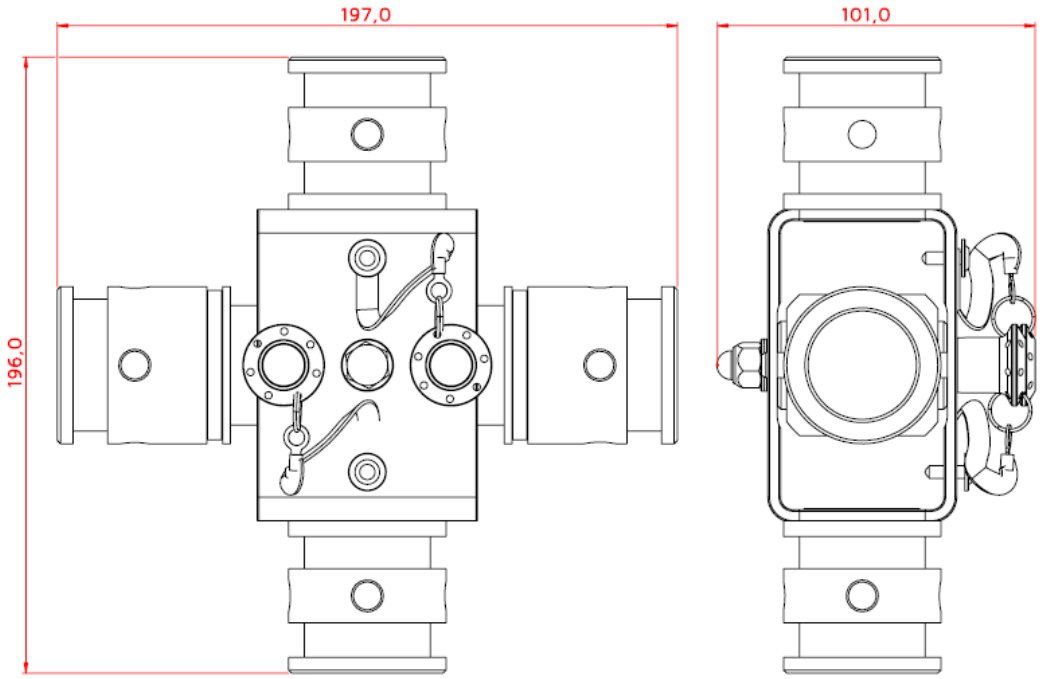

Kit content (what's in the box)– E-CONN™

- 1x E-CONN™
- 1x User Manual
- 1x male-male barrel
- 4x spigot + cotter

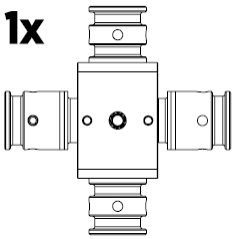

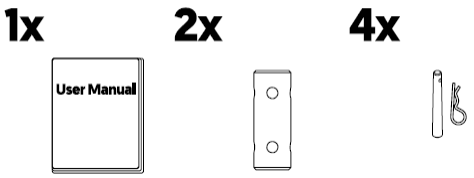

Optional accessories (not included)

- height adapter
- hanging adapter
- floor base

E-CONN™ is fully compatible with the P2 EVO™ , EVO ELEMENT™ fixtures and its accessories (base, height adaptor, spigot and cotter).

PREPARATION FOR USE

E-CONN™ has four sockets to connect up to four EVO ELEMENT™ or P2 EVO™ fixtures. Connector has two adjustable arms. Position of each arm can be fixed.

REMEMBER! Always lock positions of arms and fixtures properly with spigots.
REMEMBER! Always use only original spigots and cotters to install fixtures to this accessory.

Installation

Before adjusting the arms, you should pull out the magnetic pins from the holes as shown in the below. Then, set the positions of the arms (sample arm angle settings below).

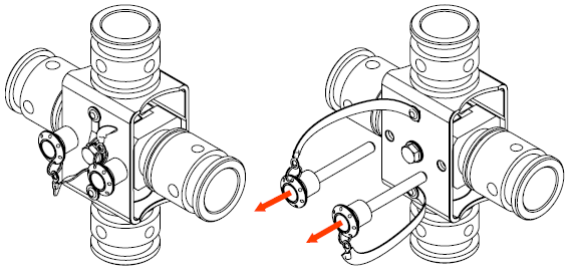

You can lock each arm on every 30°.

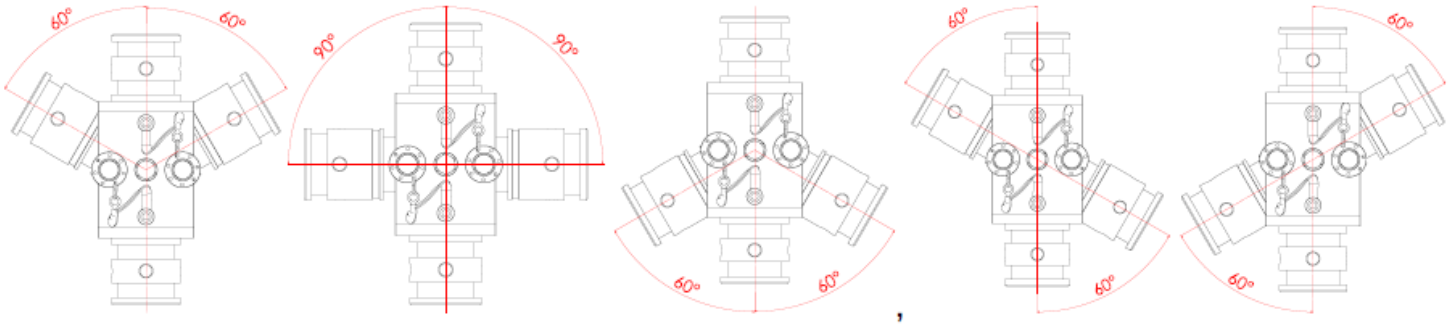

After setting the angle, you must re-lock the arm position by inserting the magnetic pin back into the hole.

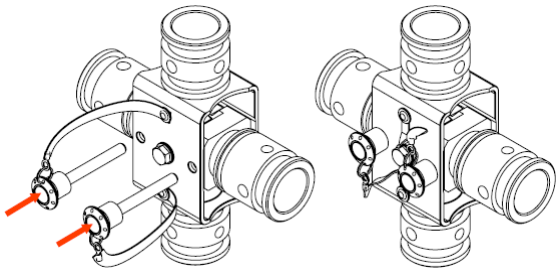

REMEMBER! It is very important that the pin exits from the other side as shown in the picture. The illustrations depict incorrect and correct pin positions. It is crucial to always follow this procedure, otherwise, it may result in an accident.

incorrect and correct pin positions

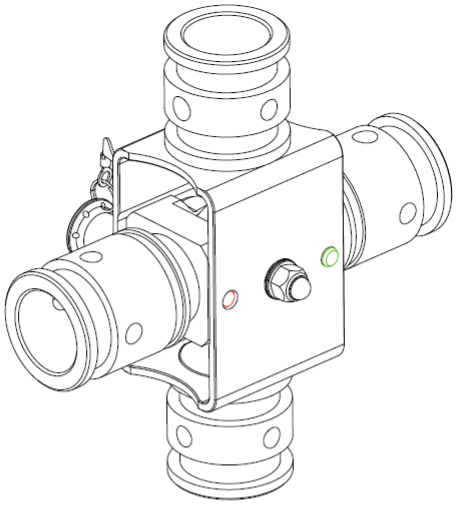

incorrect and correct pin positions

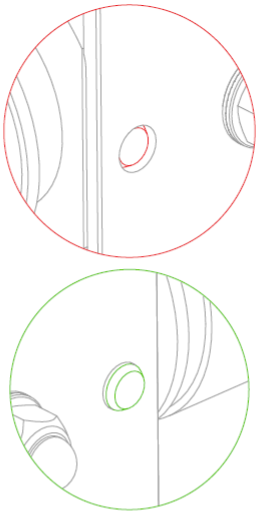

incorrect and correct pin positions

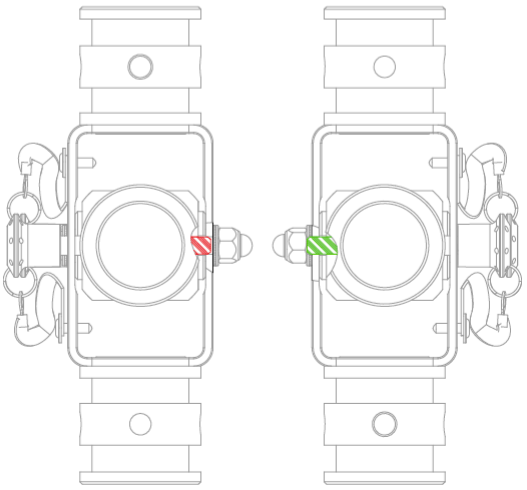

incorrect and correct pin positions

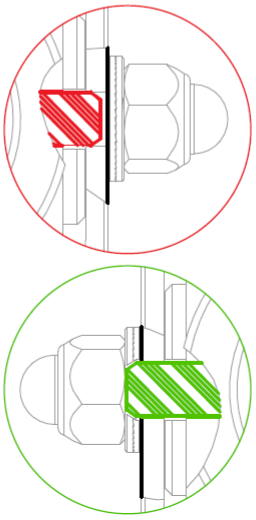

CONNECTING LUMINAIRES TO E-CONN™

REMEMBER! Before installing luminaire to E-CONN™, read the "Safety Information".
REMEMBER! The safety and suitability of lifting equipment, installation location, anchoring method, mounting components, and electrical installation are the responsibility of the installer.
REMEMBER! All local safety regulations and legal requirements must be followed during the installation and connection of the luminaire to ECONN ™.
REMEMBER! Installation may only be carried out by qualified specialists.
If you have any questions regarding the installation process, please contact your local distributor of Portman Lights or directly reach out to the manufacturer for assistance.
REMEMBER! Use only original connector elements included in the package. An example of usage is provided below.

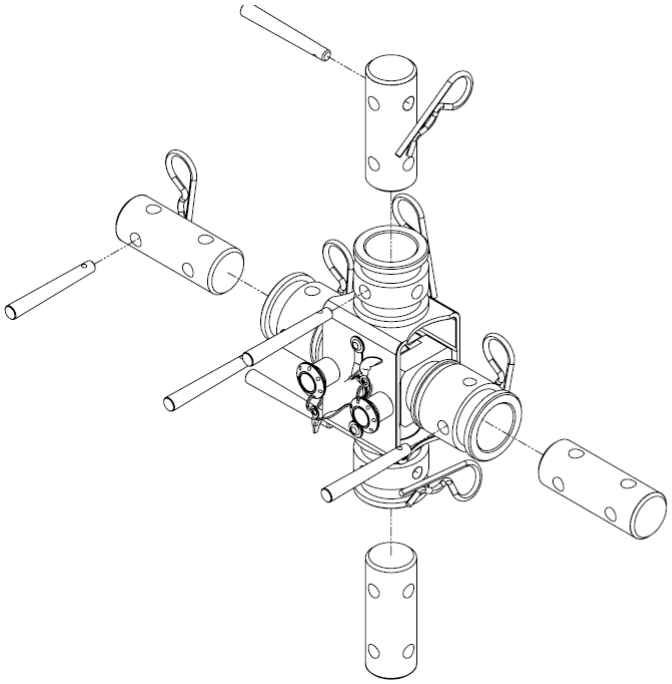

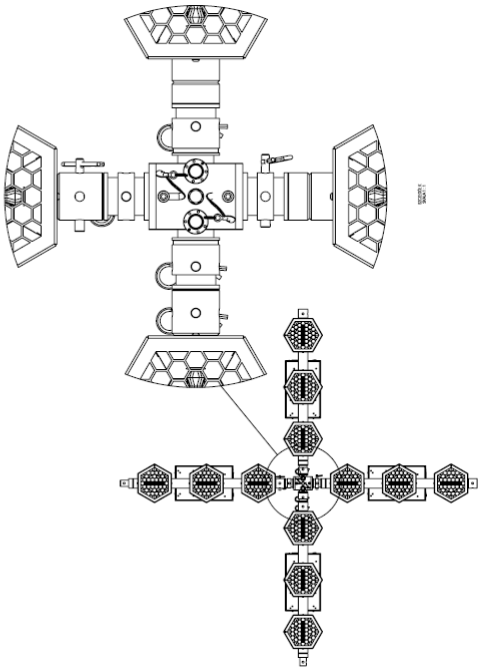

E-CONN™ Connector offers many mounting options for luminaires.

The luminaire or a series of them can be attached to a truss or similar structure using the Hanging adapter and E-CONN allowing fixture to be hung vertically. Make sure to use an appropriate clamp. Check if the supporting structure is capable of holding at least 10 times the weight of all equipment/devices to be installed on it. Block access beneath the work area. Work on a stable platform, lift the equipment to the truss and attach it. Secure the safety cable to the luminaire and wrap it around a fixed point. Each device must have its own individual safety cable, even if connected in series.

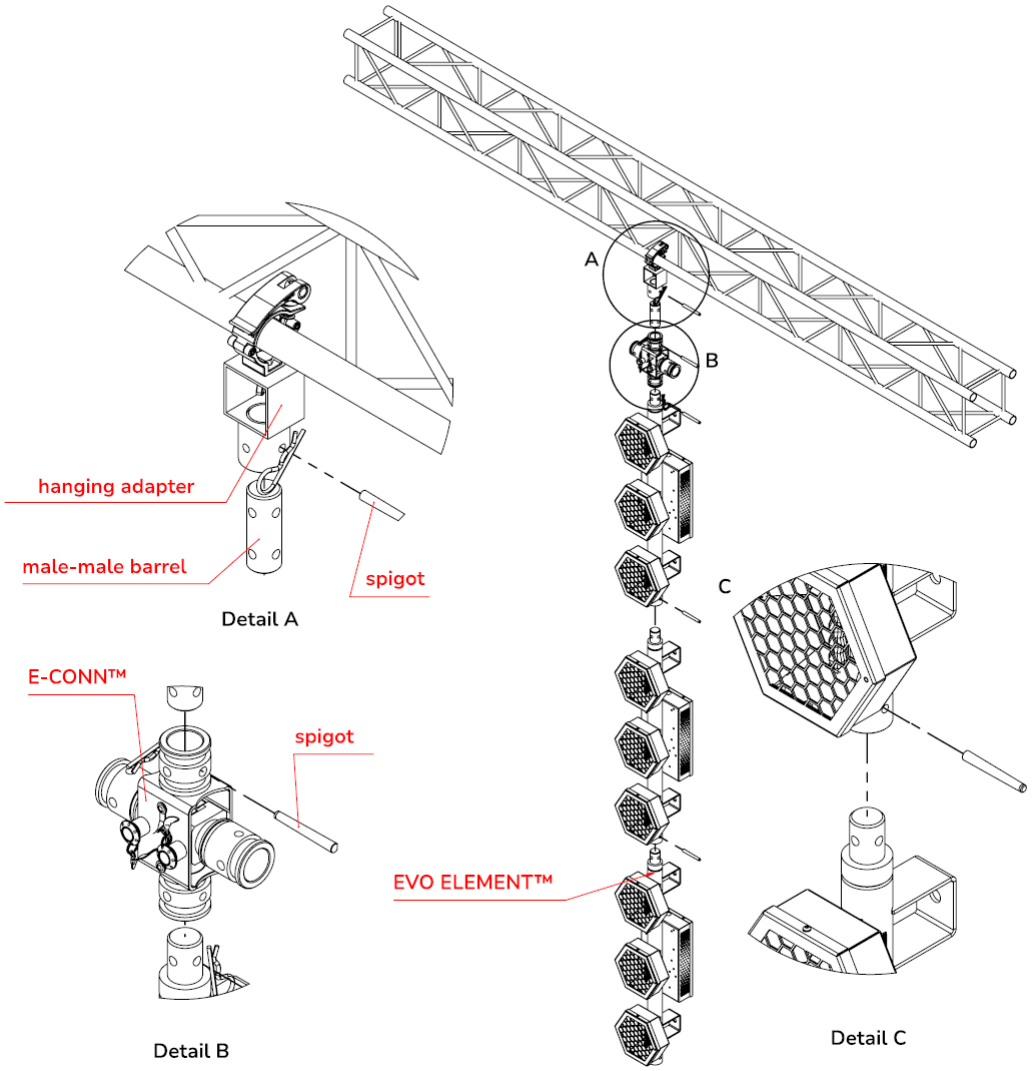

Many luminaires can be connected using accessories. Examples and installation notes below.

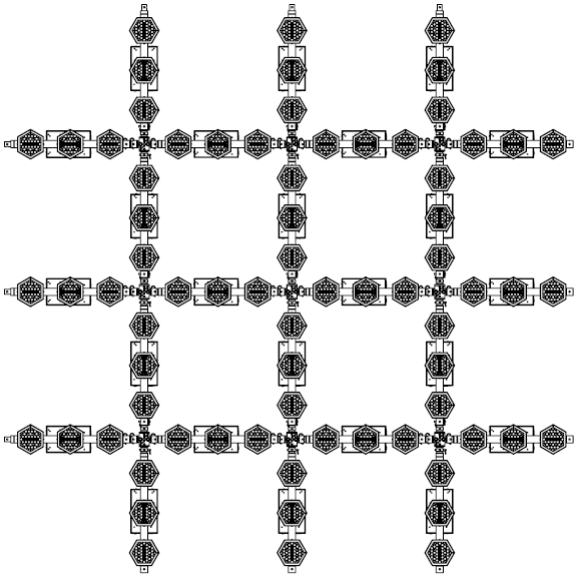

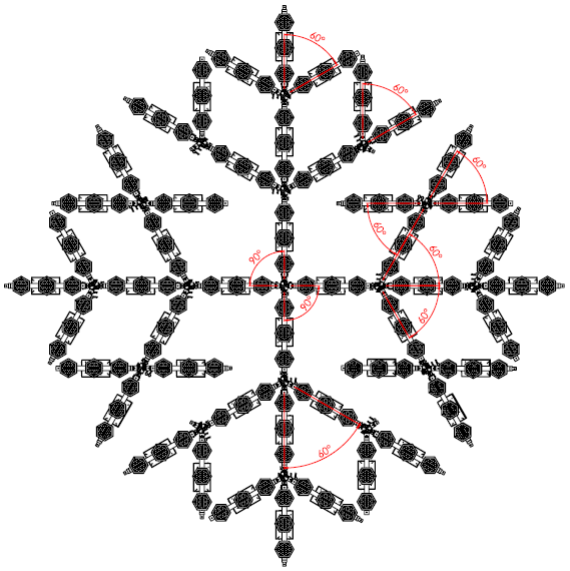

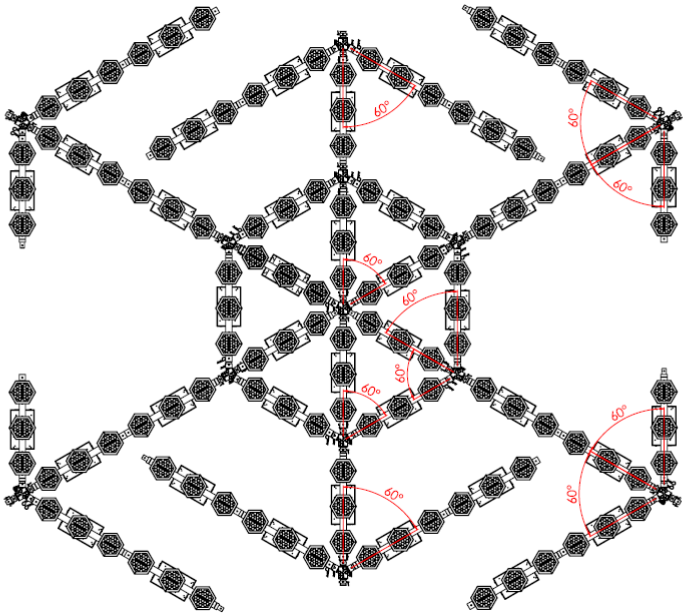

Wind force precautions:

Wind can pose a risk of serious or fatal injuries and damage caused by falling devices. If the structure is mounted in a location where many luminaires may be exposed to wind, they should be removed.

Precautions:

• Adhere to all locally applicable regulations, ordinances, and safety codes regarding construction and installation safety.

• Hang luminaires on a structure that is capable of safely supporting them to prevent safety risks when multiple luminaires are exposed to wind pressure.

• If a vertical column, panel, or configuration consisting of multiple luminaires may be exposed to wind, the arrangement should also be secured to a safe and stable structure from the lowest anchorage point using a connector, locking adapter, or safety cable.

• Secure the structure against any lateral movements.

Regardless of the structure built using E-CONN™ and EVO ELEMENT™ or P2 EVO™ luminaires, the following principles should be followed:

• Check if the supporting structure is capable of holding at least 10 times the weight of all equipment/devices to be installed on it.

• Block access beneath the work area.
• Working on a stable platform, lift the equipment to the truss and attach it.
• Secure the safety cable to the luminaire and wrap it around a fixed point. Each device must have its own individual safety cable, even if connected in series.
• Apply wind force precautions.
• Secure each luminaire to a stable structure.

REMEMBER! Always secure the hung fixture with safety wire!
CAUTION! Incorrect installation may result in the device falling and may damage it or cause damage to other objects!
CAUTION! Always use only original spigots and cotters to install or hang the fixture. Never use other brands' spigots.
Never use more than two units on base or on the hanging clamp without additional safety support.

Thank you for buying
original products!

By buying original products you buy the real quality but also support creativity and progress in the industry.

Any problem and/or question according to fixtures – contact us following these steps:
1. Send a message here:
support@portmanlights.com

Remember to add these important details:
[Serial number of the fixture]
[Issue description, videos, pictures]

2. Continue using a ticket number

You will receive an automatic ticket number. Our Support team has up to 48h to start resolving the issue. You may be asked for more details by our support team or by a distributor. Always use your ticket number for quicker resolution of the case.

© 2016-2024 Portman Lights Sp. z o. o. All rights reserved.

The information and specifications are subject to change without notice.

Portman Lights Sp. z o. o. disclaims liability for any injury, damage, direct or indirect loss,

consequential or economic loss or any other loss occasioned by the use of,

inability to use or reliance on the information contained in this user manual