User Manual [MANTIS]

WELCOME

Dear User,

Thank you for choosing **Portman MANTIS™** – the original product with a registered design.
We are proud to deliver you the highest quality, greatest design and real passion with our product.
Each fixture in the Portman portfolio is different, yet all of them ensure you the best performance to support your creativity.

FOR YOUR SAFETY, PLEASE READ THIS USER MANUAL CAREFULLY BEFORE YOUR INITIAL START-UP!

Please remember:

- any updates on this document,
- current products' libraries,
- current products' firmware,
- RMA procedure

can be found on our webpage in the support area:
www.support.portmanlights.com

SAFETY INFORMATION

WARNING! This product is for professional use only! It is not for household use.

This product presents a risk of lethal or severe injury due to heat, electric shock, fire or falls.
Intense and flashing light could trigger epileptic seizures. Read this manual before your
initial start-up and follow the safety information in this manual and engraved on the fixture.

Every person involved in the installation, service and maintenance of this device must be
qualified and have experience in working with stage lighting fixtures.

Before your initial start-up, please make sure that there is no damage caused by transportation.
Should there be any, consult your dealer and do not use the device.

Please consider that damages caused by manual modifications to the device are not subject to warranty.

CAUTION! Keep this device away from rain and moisture!
CAUTION! Be careful with your operations! With a dangerous voltage you can
suffer an electrical shock when touching the fixture and wires!
CAUTION! When in operation the fixture's surface becomes hot. Allow the device
to cool down for approximately 30 minutes before any maintenance or service.
Keep a minimum 0,2-meter distance from flammable materials to the fixture.
CAUTION! Avoid looking directly into the light source (meant especially for epileptics)!
CAUTION! Unplug the mains lead before opening the housing.

Protection against electrical shock
• Disconnect the fixture from AC power when not in use.
• Disconnect the fixture from AC power before any maintenance or service.
• Do not remove the rear cover. There are no user-serviceable parts inside.
• Always ground the fixture electrically.
• Use only the wires attached to the kit. If the power cable shows any sign of damage do not use it!
• Use only a source of AC power that complies with local building and electrical codes and has both overload and ground-fault protection.
• Do not expose the fixture to rain or moisture.
Protection against burns and fire
• Never operate when the fixture is damaged or some part is missing.

• Do not touch the surface when the fixture is in operation. The exterior of the fixture can reach temperatures up to 70°C (158°F). Allow the fixture to cool for approximately 30 minutes before any maintenance or service.
• Keep all combustible and flammable materials (for example fabric, wood, paper) at a distance of at least 20 centimetres away from the fixture. Do not cover the fixture when in operation and when it is hot.
• Do not modify the fixture.
• Do not operate the fixture if the ambient air temperature exceeds 45°C (113°F).
• Do not operate the fixture after an extreme change in the surrounding environment temperature. Allow the fixture to acclimate for at least an hour before operating.

Protection against falls

• Use only professional tripods and clamps to mount the fixture. Ensure, that the clamp or tripod is designed to withstand the weight of the fixture.
• Ensure that the structure intended for installation can hold at least 10 times the weight of all installed devices.
• Ensure that all fixtures are attached correctly to the structure and use an approved means of secondary attachment such as a safety cable.
• Block access below the work area whenever installing or removing the fixture.

Protection against eyesight damage and epileptic seizure

• Do not stare directly into the light sources. Never look at an exposed light source while it is lit.
• Provide advance notice that a flashlight is in use.
• Avoid long cycles of rapid flashing light.
• Always use safety glasses to protect your eyes when opening the front cover.

TECHNICAL SPECIFICATION

dimensions	560 x 645 x 190 mm	
	(22.05 x 25.39 x 7.48 in)	
weight (fixture only)	6.9 kg	
	(15,21 lbs)	
input voltage	100-240V 50Hz/60Hz	
power consumption	max 240W	
light source	portman haloLED™	RGBW GLOW/ Center source
power	3 x 60W	3 x 12W/ 18W
luminous flux	5500lm	1200lm/ TBA
colour temperature	1600K – 3200K	R G B + White 6000K
CRI	>80	
beam angle	94°	
DMX channels	21, 29, 29, 45, 28, 43	
DMX modes	6	
connectors	2 x 5-PIN DMX (inlet and outlet)	
	1 x EtherCON	
	1 x AC powerCON TRUE1 (inlet and outlet)	
	1 x SMA (WDMX antenna) *optional	
other features	built-in drivers	
	Portman Colour Feedback System™	
	built-in macros	
	WDMX module optional	
	Appliance class	Class I

IP rating	IP20		
declarations of conformity	CE	UKCA	

PRODUCT OVERVIEW

Dimension

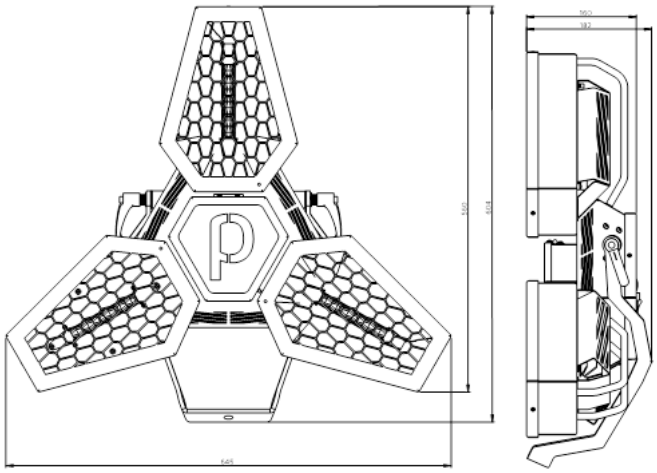

Pixel order

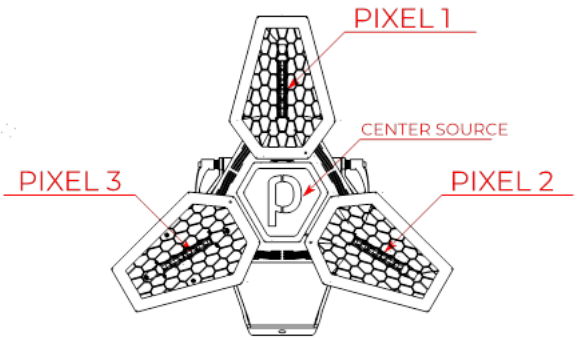

Back view

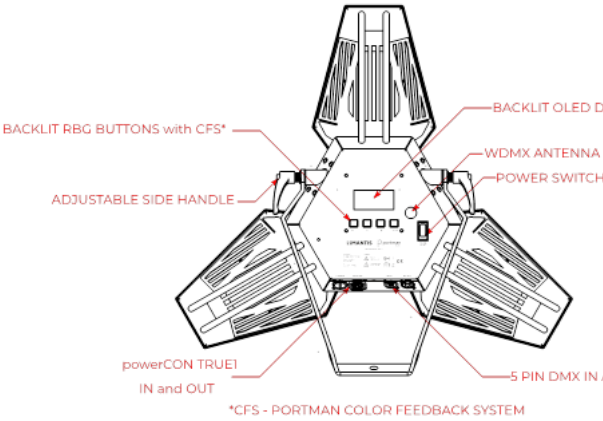

Kit content (what's in the box)

• 1x MANTIS™
• 1x AC power wire 2m
• 1x User Manual

Optional accessories (not included)

- Mantis Short Bracket
- W-DMX module
- flight case

PREPARATION FOR USE

AC power connection

Luminaire must be powered with 100-240V and 50/60Hz. This fixture will automatically detect the alternating current frequency. To turn on the fixture, simply plug in the powerCON TRUE1 and set the power switch to “ON”. Use only high quality 3 x 2.5 mm2 or larger mains power cords. Inspect all the power feed cables for damages before use. Make sure to always connect the fixtures to a protected circuit with an appropriate electrical ground. Never connect the fixture to a dimmer plug, even if it supplies proper current.

Only qualified electricians following all known electrical regulations can install the fixtures.

Luminaire comes with a power input cord terminated with powerCON TRUE1 on one end and tube connectors on the other end. Follow the rules from the table below to assemble the power plug to the wire:

Connection		EU wires	US wires
Live	L	Brown	Black
Neutral	N	Blue	White
Earth	PE	Green/Yellow	Green or Green/Yellow

CAUTION! Do not use the power cord without a plug attached!
CAUTION! Always double-check the wire with a plug attached before use!
REMEMBER! Only a qualified person can change or install the plug!

Installation

Before mounting the fixture, read and follow all safety recommendations indicated in the Safety Information.

The luminaire may be installed on a tripod, a clamp or a floor base. The fixture has two 13 mm (0.512 in) holes for a rigging clamp or screw. Before rigging operations make sure that the structure onto which you are mounting the fixtures can withstand the weight of all of the fixtures. Check if there is enough room for ventilation, configuration and maintenance in the location where you want to place the fixture. You must secure every hanged fixture with an appropriate safety wire. Make sure there are no people under the work area when hanging fixtures.

You can aim the fixture to any position that you want except towards the rigging structure. The main part can spin 3600 in the yoke. Remember not to let power and DMX wires touch the surface of the fixture. Always keep safe distance from the closest object.

REMEMBER! Always secure the hung fixture with safety wire!
CAUTION! Incorrect installation may result in the device falling and may damage it or cause damage to other objects!
REMEMBER! Always secure hanged fixture with safety wire!

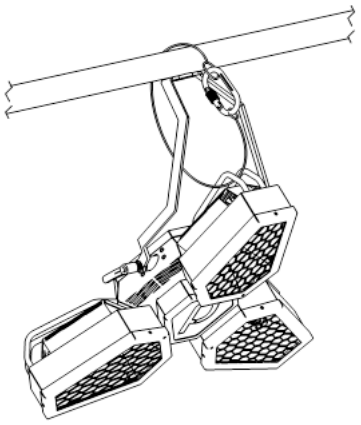

To adjust the position of the fixture when aiming it to the desired angle, use the **side handles.** Loosen them by turning them counterclockwise before adjustment and set the desired angle. Tighten the handles after adjusting the position by turning them clockwise. Operate handles carefully and manually only. Tools can damage them.
You can easily **change the orientation of tightened handles** to make your rig looks even better. Gently pull the tightened handle to disengage its teeth and rotate it into the desired orientation. By releasing the handle the return spring automatically engages the teeth.

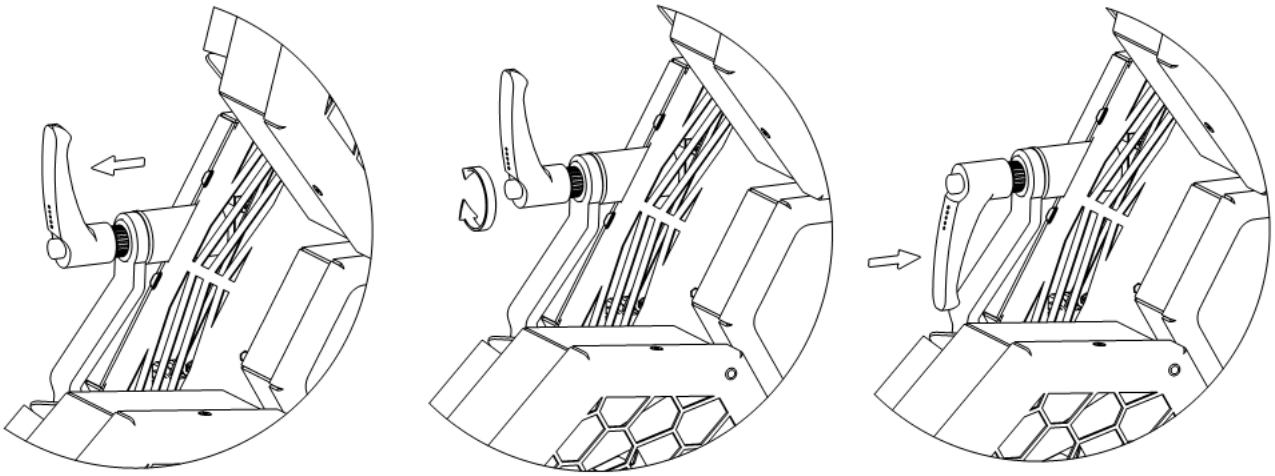

Gobo installation

You can install a gobo plate in front of the center source. There are two gobo plates coming in the box with the fixture. To install the gobo you have to unscrew the center source cover and lift it. Slide the gobo plate to fit the shape of the center pixel. After you place the gobo plate in the right position, close the center pixel cover and tighten the screw.

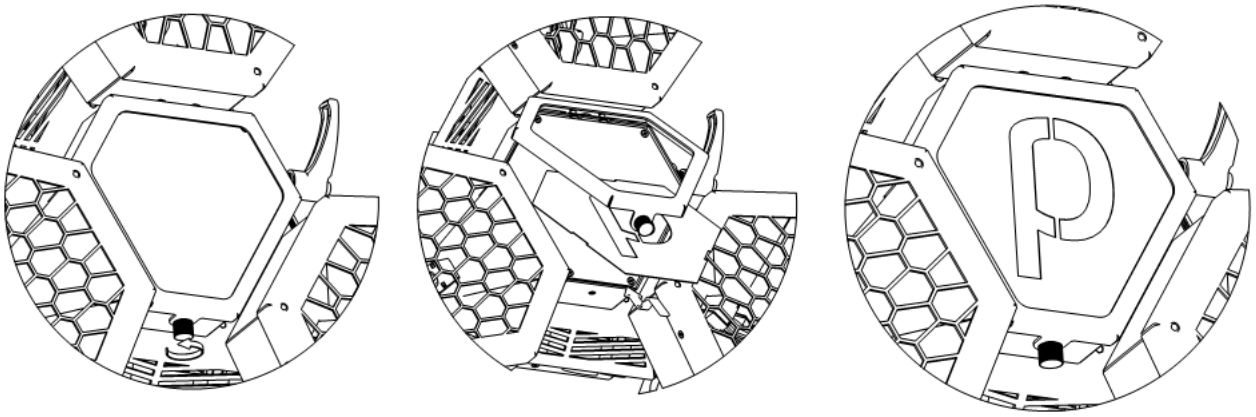

You can create your own gobo plate. The thickness of the used material should be 0,5mm +/- 0,2mm. Here's the size of the gobo plate:

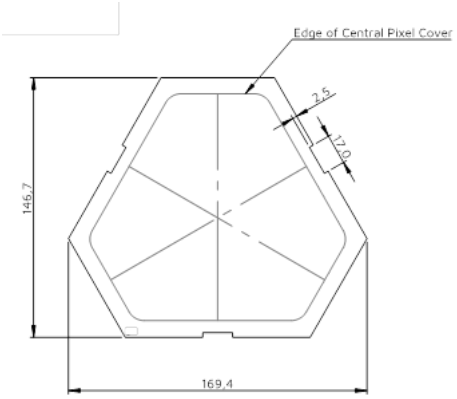

Operation modes

The luminaire can work in three operation modes: DMX, MASTER and SLAVE. DMX mode is designed to work with DMX consoles. MASTER mode is designed to operate the fixture manually, without an external controlling signal. In the MASTER mode, the fixture sends a controlling signal on the DMX output socket. The signal can control other units in SLAVE mode. Please consider that unit in MASTER mode connected to a regular DMX chain can corrupt DMX signal quality. The SLAVE mode allows you to control the fixture with the control signal sent from a unit in MASTER mode. However, the DMX signal has got the highest priority and the fixture always reacts to the connected DMX signal regardless of the operating mode.

Event	Operating Mode		
	DMX	Master	Slave
DMX wire connected	Reacts to DMX	Reacts to DMX	Reacts to DMX
WDMX connected	Reacts to WDMX	Stays in Master Mode	Receives control signal from Master unit
DMX disconnected	Keeps last DMX frame	Gets back to the last Macro or Manual setting	Receives control signal from Master unit
After power reset	All values default	Gets back to the last Macro or Manual setting	Receives control signal from Master unit

There are three ways to operate the fixture in the DMX OPERATING MODE. You can use DMX input signal, onboard manual control or WDMX input signal to control the fixture(if the WDMX card is installed). You can link the fixture to a DMX controller using a 5 pin DMX wire, or Wireless Solution Sweden hardware (if the WDMX card is installed). You can control each channel individually whether with a DMX controller or a manual control build in the fixture. The fixture has 6 DMX personalities and it supports RDM. In DMX mode fixture will not remember the manual settings after a reset is performed.
To remember the manual settings you have to use MASTER mode. You can set any lighting scene using the manual control section in the fixture's menu or play build-in macros. The fixture always switches to DMX when a DMX wire is connected. After disconnecting DMX in MASTER mode the fixture always goes back to the last macro/manual setting. After a power reset the unit remembers the last manual/macro settings. If you are going to control the fixture by onboard manual control it is recommended to use MASTER OPERATING MODE.

RDM

RDM (Remote Device Management) is an enhancement of the DMX 512 protocol and allows bi-directional communication between DMX consoles and fixtures. It works simultaneously with DMX 512 and on the same lines and wires. RDM is not affecting non-RDM devices in a line however, non-RDM devices can disrupt communication with the console. RDM allows you to change the fixture's options (such as DMX address) without even touching neither ladder or fixture's buttons. The fixture fully supports the RDM standards.

Manual operation

The fixture works in manual operation when it's not receiving DMX signal whether wired or wireless. You can adjust the brightness of all LED sources at once from the main screen, or you can control each source individually from the "CONTROL ME MANUALLY" option in the menu (refer to the "Menu" chapter to learn how to manually control channels). To enter the menu simply press "ENTER".

DMX 512

The fixture automatically switches into DMX mode after receiving DMX data. To learn how to change the DMX address or signal source (wired or wireless) refer to the "Menu" chapter. When the fixture works in the wired DMX mode You can daisy chain fixtures using 5 pin DMX wires. When daisy-chaining remember, that you can connect up to 32 devices per DMX 512 universe. Always terminate the DMX 512 line. Put the 120 Ω terminator into the last device's DMX OUT XLR socket.



When the fixture is being operated in the wireless mode (only when the WDMX card is installed) it is receiving DMX 512 signal from Wireless Solution Sweden transmitters and can send the signal throughout the 5-pin DMX OUT XLR socket. You can put the fixture with the WDMX card installed as the first fixture in a line and use it as a WDMX receiver. The fixture supports a bi-directional WDMX TRX module. It means, that the fixture supports RDM in wireless mode too. To link fixture with the WDMX transmitter first use the "UNPAIR ALL WDMX DEVICES" option from the menu, then turn the scanning mode on the transmitter. The transmitter will link with all unlinked devices. For more detailed information please refer to your transmitter's user manual.



MENU

Navigation buttons are located under the LCD on the back panel. To enter the menu press the “Enter” button. To navigate the menu use the “+” and “-“ buttons. To exit the menu from any level press “ESC”. For confirming simply push the enter button.

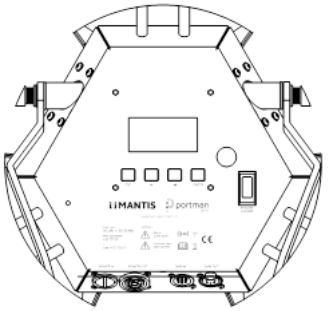

Portman Colour Feedback System (CFS)™

Luminaire is equipped with Portman Colour Feedback System™. The navigation buttons under the OLED screen are highlighted with RGB LEDs. The Portman CFS allows you to check the fixture status without even touching the display or buttons. There are few possibilities:

Button colour	Fixture state
White	Fixture receives DMX or WDMX signal
Red flashing	The fixture is in DMX operating mode, but there is no DMX nor WDMX signal detected
Green	The fixture is in MASTER operating mode and there is no DMX signal detected
Blue flashing	The fixture is in SLAVE mode and there is no DMX nor MASTER signal detected
Blue	The fixture is in SLAVE mode and there is MASTER signal detected. There is no DMX signal.

Portman Colour Feedback System™ works also when you operate the menu. When you navigate through the menu the buttons change their colours. In the first level of the menu, the buttons are blue, the second level of the menu is cyan. When you start editing a parameter in the menu the buttons turn red. Remember that any changes will not be saved until you confirm them with the “ENTER” button. The changes are stored only after you see the “You made it!” confirmation screen.

Menu map

Main section	Level 1	Level 2	Level 3	Description
MY DMX ADDRESS:	DMX ADDRESS			Sets up the DMX start address
MY PERSONAL SETTINGS	DMX MODE	SUPER SIMPLE		Sets up the DMX mode. Refer to DMX chart for DMX channels order.
		SIMPLE		
		STANDARD		
		STANDARD FINE		
		PIXEL		
		PIXEL FINE		
	DMX INPUT	WIRED		Changes the DMX input to wired (default). In this mode, the fixture is receiving a DMX signal from the DMX IN 5 pin XLR socket.
		WIRELESS		Changes the DMX input to wireless. This mode works only when the WDMX card is installed. Fixture is receiving DMX data from the WDMX card.
	OPERATING MODE	DMX		Changes the fixture’s operating mode. Refer to the Operation Modes chapter for more info. DMX is default

		MASTER		
		SLAVE		
	DIMM CURVE	LINEAR		Changes dimming curve of filaments. Halogen mode is emulating the behavior of halogen using also glow sources. Logarithmic is the default.
		LOGARITHMIC		
	FLICKER MODE	MODE 1 (2.8kHz)		Changes the frequency of the LED driving signals.
		MODE 2 (5.4kHz)		
		MODE 3 (10kHz)		
	DISPLAY AND BUTTONS	DP BRIGHTNESS		Changes the parameters of display and buttons highlight.
		DISPLAY OFF TIME		
		WELCOME SCREEN		
		NO DMX BTN FLASH		
	RESET ALL TO DEFAULT			Resets all the options to default values.
WANNA GO WIRELESS?	UNPAIR ALL WDMX DEVICES	UNPAIRING MODE		Unpairs all connected WDMX transmitters
	WDMX MODE	G3		Switches between WDMX modes
		G4		
		G5		
	WDMX INFO	SIGNAL STRENGTH		Shows WDMX card info.
		LINK STATUS		
		RDM STATUS		
		DMX DATA STATUS		
INFO ABOUT MYSELF	WHO MADE ME			Shows the name of the fixture’s manufacturer.
	MY NAME IS			Shows the fixture’s name given by the manufacturer.
	YOU CALL ME			Shows the fixture’s name given by the user.
	MY ID IS			Shows the fixture’s RDM unique ID number.
	MY VERSION IS			Shows actual firmware version
	I WORKED HARD FOR			It Shows time the fixture has been turned on
CONTROL ME MANUALLY	MAIN SOURCES	INTENSITY	0 – 100% BRIGHTNESS	Sets all main sources dimmer value
		STROBE	0 - 100% STROBE	Sets all main sources strobe value
	GLOW	INTENSITY	0 – 100% BRIGHTNESS	Sets glow all pixels dimmer value
		RED	0 – 100% RED	Sets glow red value

		GREEN	0 – 100% GREEN	Sets glow green value
		BLUE	0 – 100% BLUE	Glow blue value
		WHITE	0 – 100% WHITE	Glow white value
	MACRO	MACRO	MACRO NUMBER SELECT	Selects macro
		MACRO SPEED	MACRO SPEED	Sets the macro speed
		MACRO INTENSITY	0 – 100% BRIGHTNESS	Sets macro intensity value

Thank you for buying original products!

By buying original products you buy the real quality but also support creativity and progress in the industry.

Any problem and/or question according to fixtures – contact us following these steps:

1. Send a message here:

support@portmanlights.com

Remember to add these important details:
[Serial number of the fixture]
[Issue description, videos, pictures]

2. Continue using a ticket number

You will receive an automatic ticket number. Our Support team has up to 48h to start resolving the issue. You may be asked for more details by our support team or by a distributor. Always use your ticket number for quicker resolution of the case.

© 2016-2024 Portman Lights Sp. z o. o. All rights reserved.

The information and specifications are subject to change without notice.
Portman Lights Sp. z o. o. disclaims liability for any injury, damage, direct or indirect loss, consequential or economic loss or any other loss occasioned by the use of, inability to use or reliance on the information contained in this user manual.