# User Manual [OMNIRAY]

Table of contents


- WELCOME
- SAFETY INFORMATION
- TECHNICAL SPECIFICATION
- PRODUCT OVERWIEW
- PREPARATION FOR USE
- MENU
- FIRMWARE UPDATE
- DMX CHART
- PHOTOMETRICS


# WELCOME

Dear User,
Thank you for choosing Portman OMNIRAY™ – the original product with a registered design.
We are proud to deliver you the highest quality, greatest design and real passion with our product.
Each fixture in the Portman portfolio is different, yet all of them ensure you the best performance to support your creativity.

FOR YOUR SAFETY, PLEASE READ THIS USER MANUAL CAREFULLY BEFORE YOUR INITIAL START-UP!

Please remember:

• any updates on this document,
• current products' libraries,
• current products' firmware,
• RMA procedure
can be found on our webpage in the support area: www.portmanlights.com/support

The information and specifications are subject to change without notice. Portman Lights Sp. z o. o. disclaims liability for any injury, damage, direct or indirect loss, consequential or economic loss or any other loss occasioned by the use of, inability to use or reliance on the information contained in this user manual.

# SAFETY INFORMATION

**WARNING!** This product is for professional use only! It is not for household use.

This product presents a risk of lethal or severe injury due to heat, electric shock, fire or falls. Intense and flashing light could trigger epileptic seizures. Read this manual before your initial start-up and follow the safety information in this manual and engraved on the fixture.

Every person involved in the installation, service and maintenance of this device must be qualified and have experience in working with stage lighting fixtures.

Before your initial start-up, please make sure that there is no damage caused by transportation. Should there be any, consult your dealer and do not use the device.

Please consider that damages caused by manual modifications to the device are not subject to warranty.

**CAUTION!** Be careful with your operations! With a dangerous voltage you can suffer an electrical shock when touching the fixture and wires!
**CAUTION!** When in operation the fixture's surface becomes hot. Allow the device to cool down for approximately 30 minutes before any maintenance or service. Keep a minimum 0,7-meter distance from flammable materials to the fixture.
**CAUTION!** Avoid looking directly into the light source (meant especially for epileptics)!
**CAUTION!** Unplug the mains lead before opening the housing.

Protection against electrical shock

• Disconnect the fixture from AC power when not in use.
• Disconnect the fixture from AC power before any maintenance or service.

• Do not remove the rear cover. There are no user-serviceable parts inside.
• Always ground the fixture electrically.
• Use only the wires attached to the kit. If the power cable shows any sign of damage do not use it!
• Use only a source of AC power that complies with local building and electrical codes and has both overload and ground-fault protection.

Protection against burns and fire
• Never operate when the fixture is damaged or some part is missing.
• Do not touch the surface when the fixture is in operation. The exterior of the fixture can reach temperatures up to 33.6°C (92°F). Allow the fixture to cool for approximately 30 minutes before any maintenance or service.
• Keep all combustible and flammable materials (for example fabric, wood, paper) at a distance of at least 70 centimetres away from the fixture. Do not cover the fixture when in operation and when it is hot.
• Do not modify the fixture.
• Do not operate the fixture if the ambient air temperature exceeds 40°C (105°F).
• Do not operate the fixture after an extreme change in the surrounding environment temperature. Allow the fixture to acclimate for at least an hour before operating.

Protection against eyesight damage and epileptic seizure
• Do not stare directly into the light sources. Never look at an exposed light source while it is lit.
• Provide advance notice that a flashing lights are is in use.
• Avoid long cycles of rapid flashing light.
• Always use safety glasses to protect your eyes when opening the device.

# TECHNICAL SPECIFICATION

| | OMNIRAY |
|---|---|
| **Max Power consumption（W）** | 500W |
| **LED source** | main source: 22*20W 6-in-1 RGBWLA, narrow source: 1*40W 4-in-1 RGBW |
| **Beam angle（50%）** | main source：85°，narrow source：3.4° |
| **Color temperature（K）** | Main source:1998K - 6196K, Narrow Source: 6377K |
| | |

| | |
|---|---|
| **CRI** | Main source in calibrated mode: >94,4 |
| **Size** | 40 x 44 x 29cm (w. yoke) |
| **N.W.** | 13 kg |
| **Certificate** | CE，ROHS，ETL，UL，UKCA |
| **IP grade** | IP65 |

# PRODUCT OVERWIEW

## Dimension

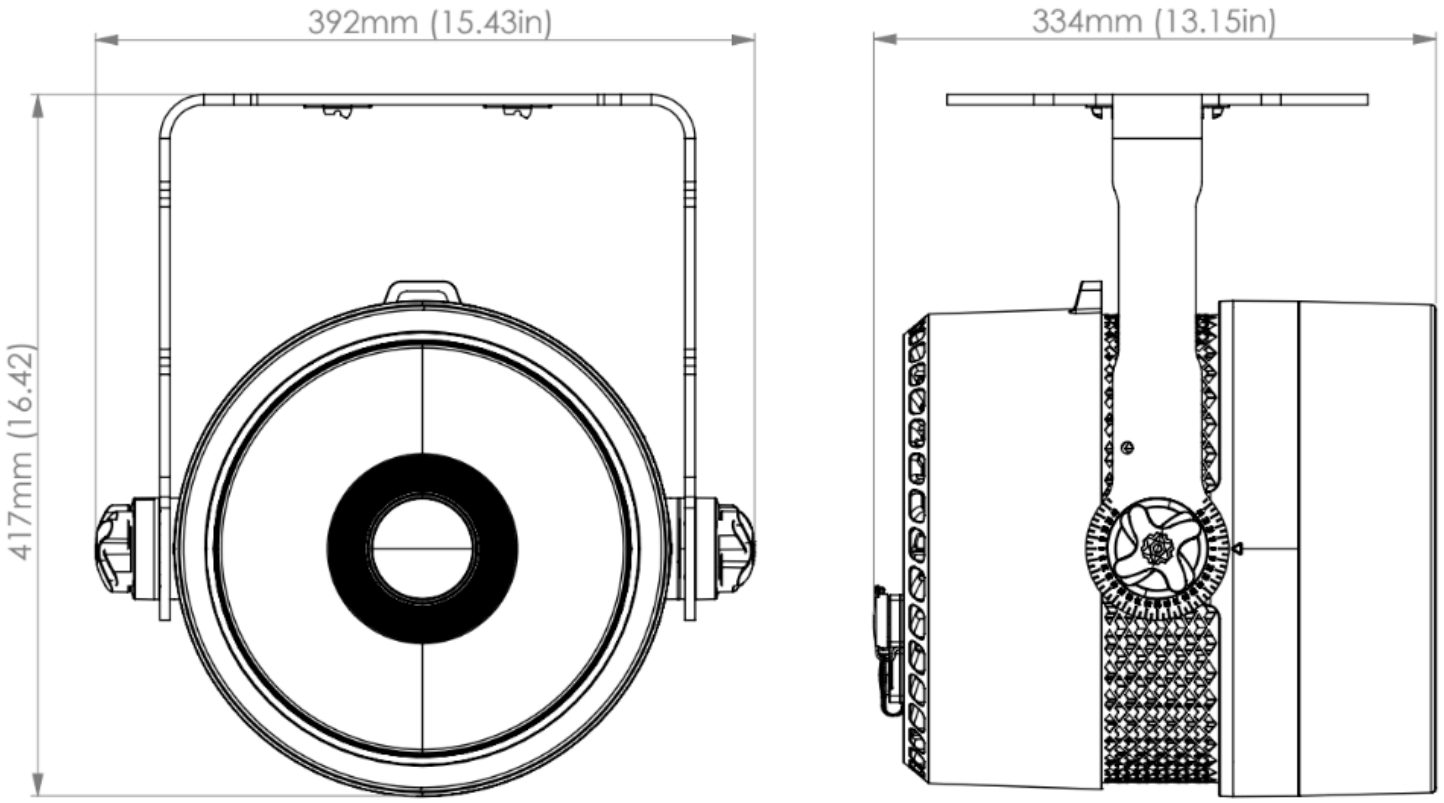

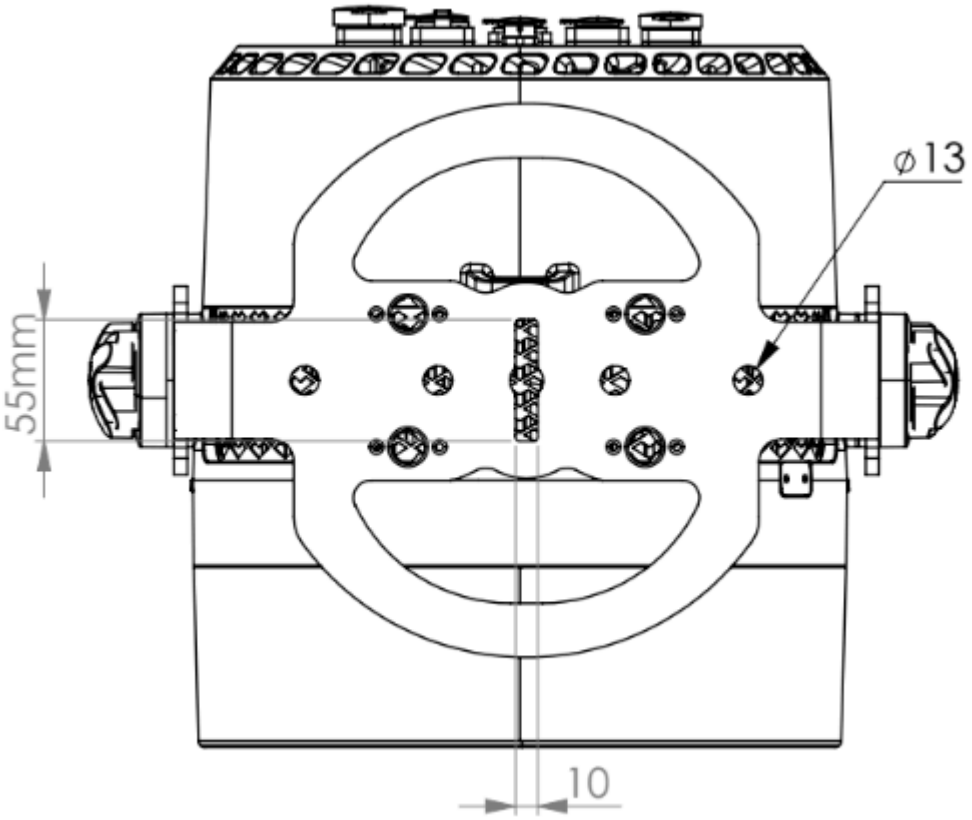


## Source order

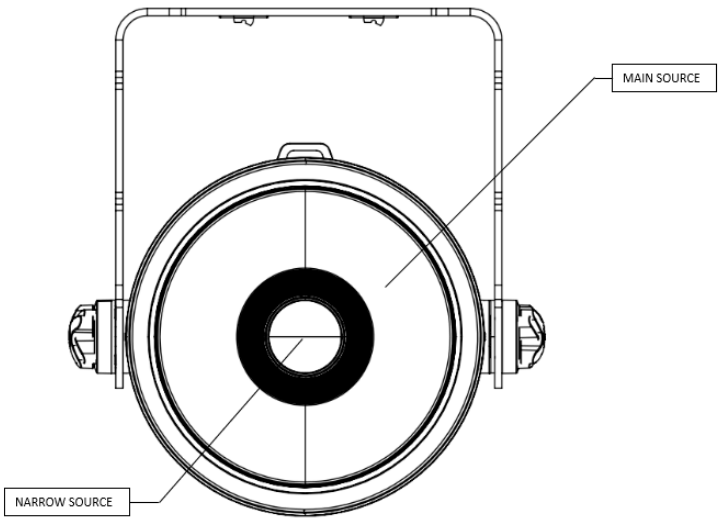


## Back view

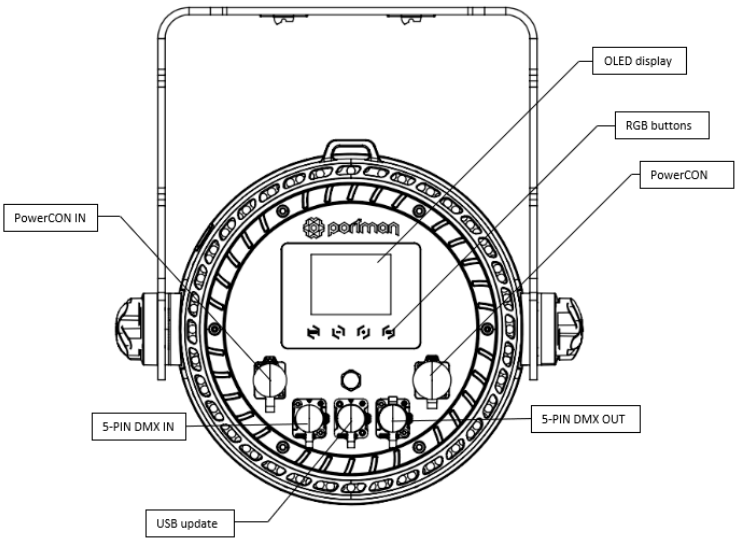


# Kit content (what's in the box)

- Fixture

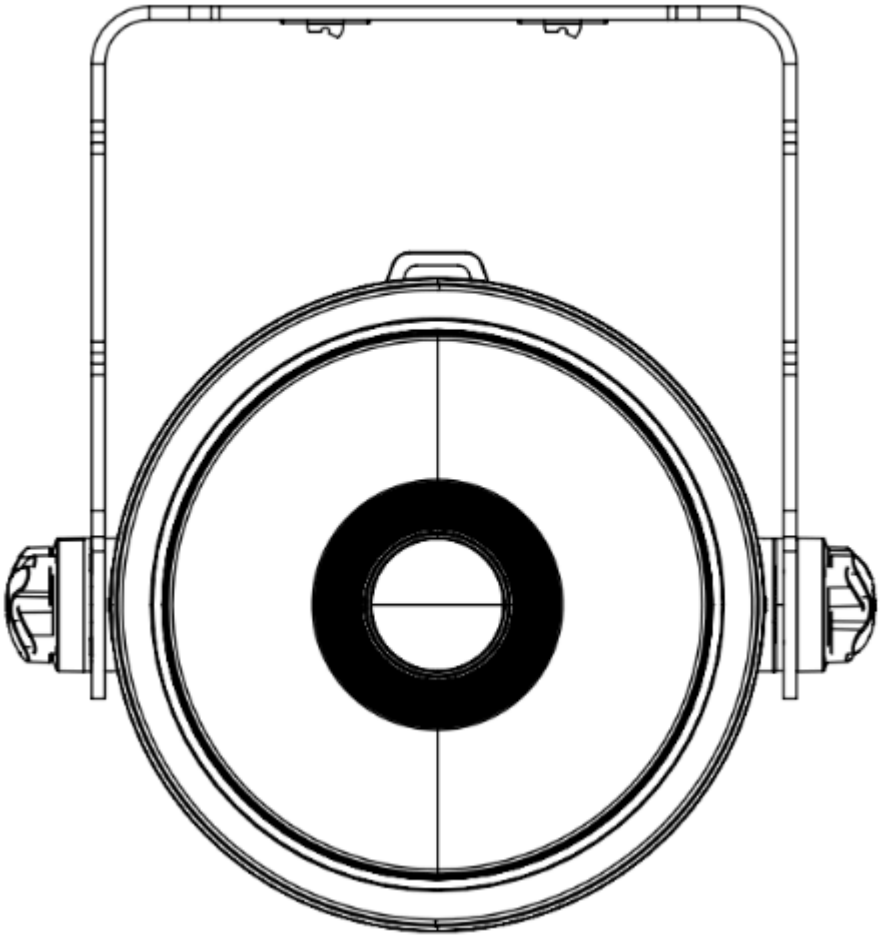

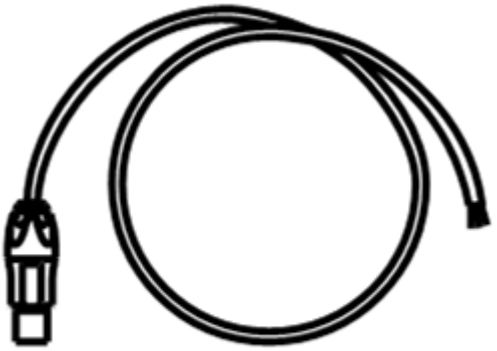

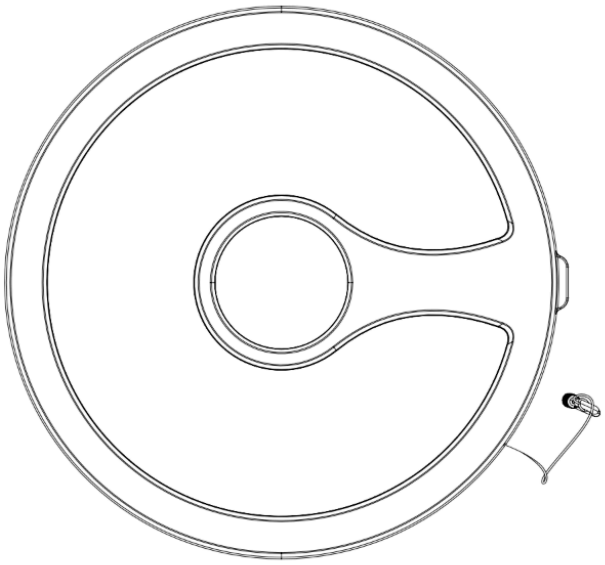

- AC power cord (PowerCon TRUE 1/no AC plug)
- OMNICLE™ – decorative magnetic cover

## Optional accessories (not included)

- Rigging:
  - omega bracket with 1/4 fast locks
- Optics – magnetic:
  - diffuser (avg)
  - diffuser (strong)
  - elliptical diffuser (10×40)
  - elliptical diffuser (10×60)
  - Fresnel lens
- Control features:
- CRMX
- Packing:
  - flight case

# PREPARATION FOR USE

## AC power connection

Luminaire must be powered with 100-240V and 50/60Hz. This fixture will automatically detect the alternating current frequency. To turn on the fixture, simply plug in the powerCON. Use only high quality 3 x 2.5 mm2 or larger mains power cords. Inspect all the power feed cables for damages before use. Make sure to always connect the fixtures to a protected circuit with an appropriate electrical ground. Never connect the fixture to a dimmer plug, even if it supplies proper current.

Only qualified electricians following all known electrical regulations can install the fixtures.

Luminaire comes with a power input cord terminated with powerCON TRUE1 on one end and tube connectors on the other end. Follow the rules from the table below to assemble the power plug to the wire:

| Connection | | EU wires | US wires |
|---|---|---|---|
| Live | L | Brown | Black |
| Neutral | N | Blue | White |
| Earth | PE | Green/Yellow | Green or Green/Yellow |

**CAUTION!** Do not use the power cord without a plug attached!
**CAUTION!** Always double-check the wire with a plug attached before use!
**REMEMBER!** Only a qualified person can change or install the plug!

## INSTALLATION

Before mounting the luminaire, read and follow all the safety instructions given in the Safety Information.

The luminaire can be mounted on a tripod, clamp or floor base. The luminaire has a 13 mm (0.512 inch) diameter hole for the clamp, mounting screw and two CAMLOC connectors . Before mounting, make sure that the structure on which the luminaires are mounted can support the weight of all the luminaires. Verify that the location where you want to place the fixture has enough space for ventilation, setup and maintenance. Secure each suspended fixture with a suitable safety cable.  Make sure that no people are under the work area when hanging the equipment.

The device can be placed in any position, except in the direction of the rigging structure. The main part can rotate 360° in the yoke. Be sure that the power and DMX cables do not touch the surface of the device. Always maintain a safe distance from the nearest object.

**REMEMBER!** Always secure the hung fixture with safety wire!

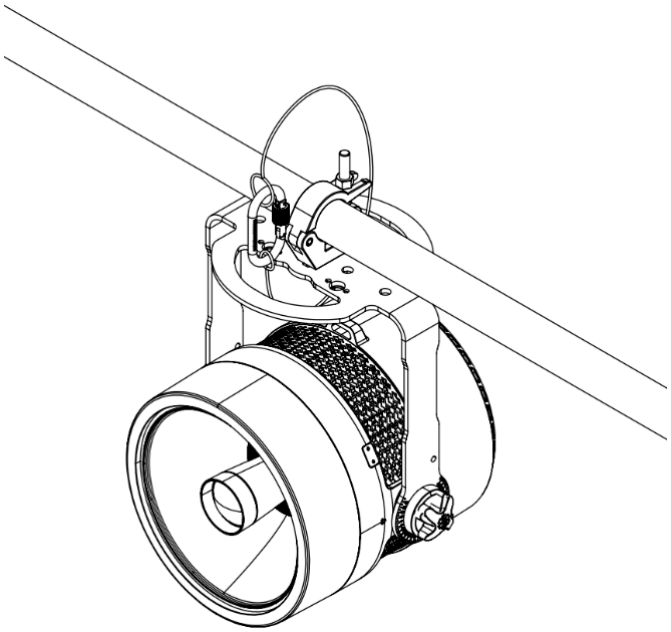

**CAUTION!** Incorrect installation may result in the device falling and may damage it or cause damage to other objects!

Use the side handles to adjust the position of the device when setting it to the desired angle. Before adjusting them, loosen them by turning counterclockwise and set the desired angle. After adjusting the position, tighten the handles by turning them clockwise. The adjustment range is 360 degrees with increments of 5 degrees. Handle the handles carefully and only by hand. Tools may damage them.

**CAUTION!** Make sure the handle is loose enough not to damage the tooth mechanism.



The device is equipped with a front aperture, which can be mounted in one of 8 positions on the front of the device. The aperture is held in place by magnets. In addition, it is equipped with a safety cord (safety), which should always be attached to the device during installation.

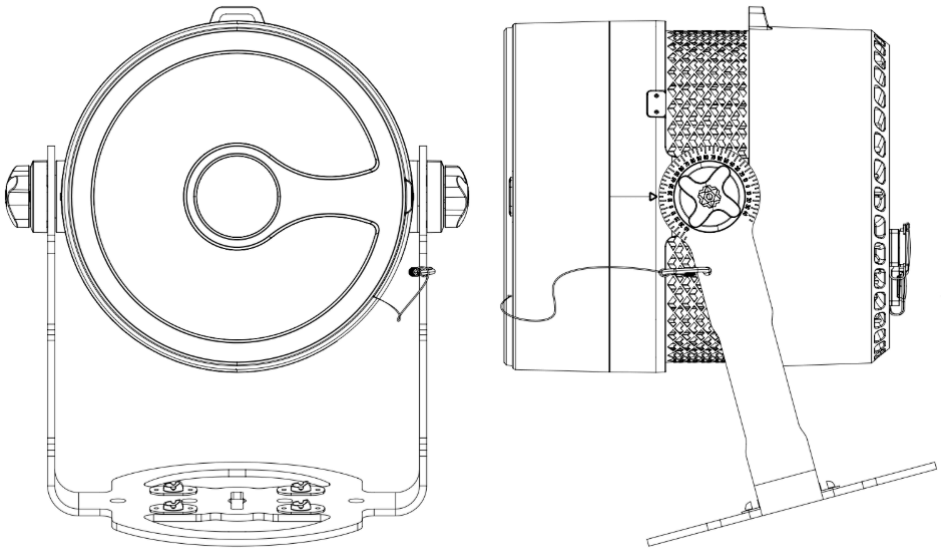

## Operation modes

The luminaire can work in three operation modes: DMX, INFLUENCER and FOLLOWER. DMX mode is designed to work with DMX consoles. INFLUENCER mode is designed to operate the fixture manually, without an external controlling signal. In the INFLUENCER mode, the fixture sends a controlling signal on the DMX output socket. The signal can control other units in FOLLOWER mode. Please consider that unit in INFLUENCER mode connected to a regular DMX chain can corrupt DMX signal quality. The FOLLOWER mode allows you to control the fixture with the control signal sent from a uni

t in INFLUENCER mode. However, the DMX signal has got the highest priority and the fixture always reacts to the connected DMX signal regardless of the operating mode.

| Event | Operating Mode | | |
|---|---|---|---|
| | DMX | Influencer | Follower |
| DMX wire connected | Reacts to DMX | Reacts to DMX | Reacts to DMX |
| CRMX connected | Reacts to CRMX | Stays in INFLUENCER Mode | Receives control signal from INFLUENCER unit |
| CRMX disconnected | Keeps last DMX frame | Gets back to the last Macro or Manual setting | Receives control signal from INFLUENCER unit |
| After power reset | All values default | Gets back to the last Macro or Manual setting | Receives control signal from INFLUENCER unit |

There are three ways to operate the fixture in the DMX OPERATING MODE. You can use DMX input signal, onboard manual control or CRMX input signal to control the fixture(if the CRMX card is installed). You can link the fixture to a DMX controller using a 5 pin DMX wire, or CRMX hardware (if the CRMX card is installed). The fixture has 8 DMX personalities and it supports RDM. In DMX mode fixture will not remember the manual settings after a reset is performed.

To remember the manual settings you have to use INFLUENCER mode. You can set any lighting scene using the manual control section in the fixture’s menu or play build-in macros. The fixture always switches to DMX when a DMX wire is connected. After disconnecting DMX in INFLUENCER mode the fixture always goes back to the last macro/manual setting. After a power reset the unit remembers the last manual/macro settings. If you are going to control the fixture by onboard manual control it is recommended to use INFLUENCER OPERATING MODE.

**RDM**

RDM (Remote Device Management) is an enhancement of the DMX 512 protocol and allows bi-directional communication between DMX consoles and fixtures. It works simultaneously with DMX 512 and on the same lines and wires. RDM is not affecting non-RDM devices in a line however, non-RDM devices can disrupt communication with the console. RDM allows you to change the fixture’s options (such as DMX address) without even touching neither ladder or fixture’s buttons. The fixture fully supports the RDM standards.

**Manual operation**

The fixture works in manual operation when it’s not receiving DMX signal whether wired or wireless. You can adjust the brightness of all LED sources at once from the main screen, or you can control each source individually from the “CONTROL ME MANUALLY” option in the menu (refer to the “Menu” chapter to learn how to manually control channels). To enter the menu simply press “ENTER”.

DMX 512

The fixture automatically switches into DMX mode after receiving DMX data. To learn how to change the DMX address or signal source (wired or wireless) refer to the “Menu” chapter. When the fixture works in the wired DMX mode You can daisy chain fixtures using 5 pin DMX wires. When daisy-chaining remember, that you can connect up to 32 devices per DMX 512 universe. Always terminate the DMX 512 line. Put the 120 Ω terminator into the last device’s DMX OUT XLR socket.

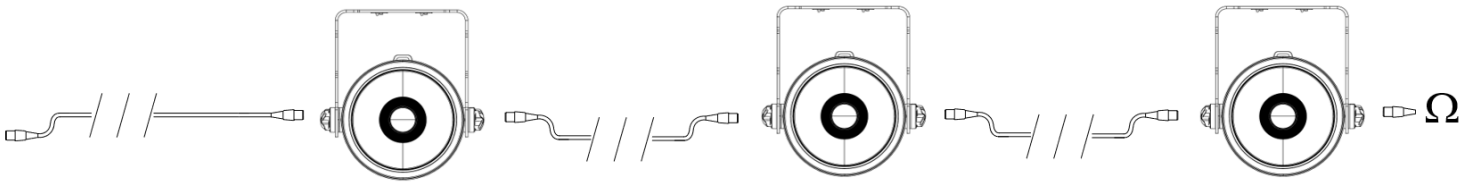


When the unit is in wireless mode (only when a CRMX card is installed), it receives the DMX 512 signal from the wireless transmitters and can send the signal through the 5-pin DMX OUT XLR jack. A device with a CRMX card installed can be placed first in line and used as a CRMX receiver. The device supports a two-way CRMX TRX module. This means that the device also supports RDM in wireless mode. To connect the device to a CRMX transmitter, first use the “UNPAIR ALL WDMX DEVICES” option from the menu, and then enable scan mode on the transmitter. The transmitter will connect to all unconnected devices. For more detailed information, please refer to the transmitter's manual.

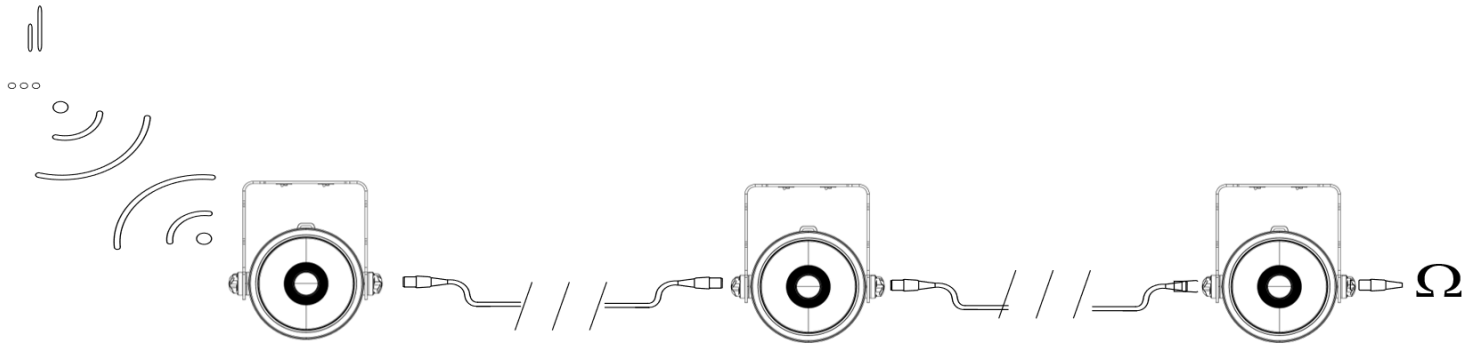


**REMEMBER!** Always terminate DMX line!

# MENU

Navigation buttons are located under the LCD on the back panel. To enter the menu press the “Enter” button. To navigate the menu use the “+” and “-“ buttons. To exit the menu from any level press “ESC”. For confirming simply push the enter button.

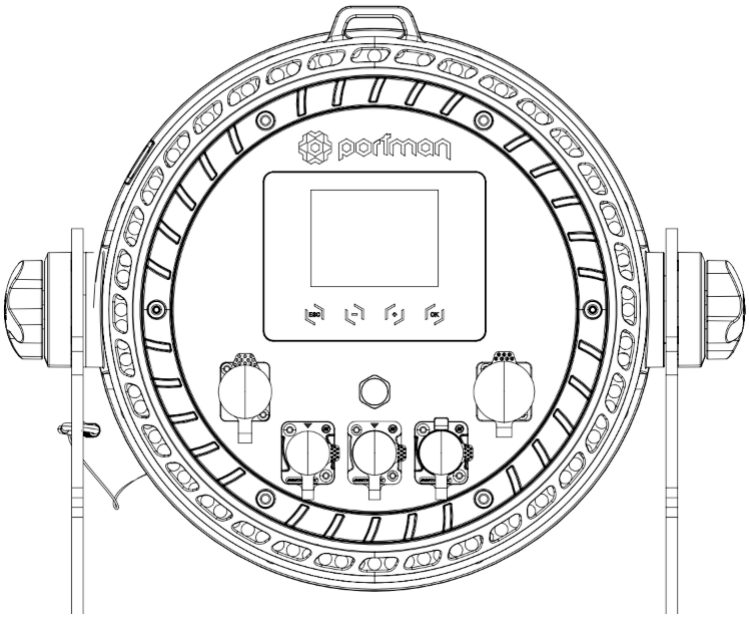


**Portman Colour Feedback System (CFS)™**

Luminaire is equipped with Portman Colour Feedback System™. The navigation buttons under the OLED screen are highlighted with RGB LEDs. The Portman CFS allows you to check the fixture status without even touching the display or buttons. There are few possibilities:

| Button colour | Fixture state |
|---|---|
| Green | Fixture receives DMX signal |
| Cyan | Fixture receives wireless DMX signal |
| Red flashing | The fixture is in DMX operating mode, but there is no DMX no wireless DMX signal detected |
| Magenta | The fixture is in INLUENCER operating mode and there is no DMX signal detected |
| Yellow | The fixture is no DMX and the operating mode is set to FOLLOWER |

The Portman Colour Feedback System™ also works when operating menus. As you move through the menu, the buttons change colors. At the first level of the menu, the buttons are blue. When you start editing a parameter in the menu, the buttons turn red and start flashing. Note that any changes will not be saved until they are confirmed with the “ENTER” button.

| Main section | Level 1 | Level 2 | Level 3 | Description |
|---|---|---|---|---|
| MY DMX ADDRESS: | DMX ADDRESS | | | Sets up the DMX start address |
| MY PERSONAL SETTINGS | MY DMX MODE | SIMPLE | | Sets up the DMX mode. Refer to DMX chart for DMX channels order. |
| | | RGBW | | |
| | | RGBW FINE | | |
| | | CCT | | |
| | | CCT FINE | | |
| | | TUNGSTEN | | |
| | | TUNGSTEN FINE | | |
| | | FULL ACCESS | | |
| | DMX INPUT | WIRED | | Changes the DMX input to wired (default). In this mode, the fixture is receiving a DMX signal from the DMX IN 5 pin XLR socket. |
| | | WIRELESS | | Changes the DMX input to wireless. This mode works only when the wireless DMX card is installed. Fixture is receiving DMX data from the wireless DMX card. |
| | IF I LOSE DMX | KEEP LAST FRAME | | |
| | | BLACKOUT | | |
| | OPERATING MODE | DMX | | Changes the fixture’s operating mode. Refer to the Operation |
| | | INFLUENCER | | |

| | | | | |
|---|---|---|---|---|
| | | FOLLOWER | | Modes chapter for more info. DMX is default |
| | DIMMER STYLE | DIMMING CURVE | LINEAR | Changes dimming curve of filaments. Halogen mode is emulating the behavior of halogen using also glow sources. Logarithmic is the default. |
| | | | SQUARE | |
| | | | INV SQUARE | |
| | | | S-CURVE | |
| | | DIMMER FADE | SMOOTH | |
| | | | FAST | |
| | FLICKER MODE | 1.2kHz | | Changes the frequency of the LED driving signals. |
| | | 2.4kHz | | |
| | | 12kHz | | |
| | FAN STUFF | FAN ROLLING | OFF | Fan Off. |
| | | | SILENT | LED Fan 1200 RPM. |
| | | | | Power Fan 1200 RPM. |
| | | | SMART | Value in the fan rolling depending on temperature. |
| | | | BEAST | Max possible RPM. |
| | | FAN CLEANING AT STARTUP | YES | |
| | | | NO | |
| | DISPLAY AND BUTTONS | DISPLAY BRIGHTNESS | 0-100% | Changes the parameters of display and buttons highlight. |
| | | OFF TIME | 30s | |

| | | | | |
|---|---|---|---|---|
| | | | 60s | |
| | | | NEVER | |
| | | WELCOME SCREEN | YES | |
| | | | NO | |
| | | ENJOING COLOUR FEEDBACK SYSTEM | YES | |
| | | | NO | |
| | | AUTOMATIC KEY LOCK | YES | |
| | | | NO | |
| | RESET ALL TO DEFAULT | | | Resets all the options to default values. |
| CONTROL ME MANUALLY | MAIN SOURCE | INTENSITY | 0 – 100% BRIGHTNESS | Sets main source dimmer value. |
| | | R | 0 – 100% RED | Sets main source red value. |
| | | G | 0 – 100% GREEN | Sets main source green value. |
| | | B | 0 – 100% BLUE | Sets main source blue value. |
| | | CCT | 0 – 100% CCT | Sets main source CCT value. |
| | NARROW BEAM | R | 0 – 100% RED | Sets narrow source red value. |

| | | | | |
|---|---|---|---|---|
| | | | | |
| | | G | 0 – 100% GREEN | Sets narrow source green value. |
| | | B | 0 – 100% BLUE | Sets narrow source blue value. |
| | | W | 0 – 100% WHITE | Sets narrow source white value. |
| | MACRO | MACRO SELECT | MACRO NUMBER SELECT | Selects macro. |
| | | MACRO INTENSITY | 0 – 100% BRIGHTNESS | Sets macro intensity value. |
| | | MACRO SPEED | MACRO SPEED | Sets the macro speeds |
| | | MACRO SPREAD | MACRO SPREAD | Sets the macro spreads. |
| WANNA GO WIRELESS? | UNPAIR ALL WDMX DEVICES | UNPAIRING MODE | | Unpairs all connected WDMX transmitters |
| | WIRELESS INFO | SIGNAL STRENGTH | | Show wireless card info. |
| | | LINK STATUS | | |
| | | RDM STATUS | | |

| | | | | |
|---|---|---|---|---|
| | | DMX DATA STATUS | | |
| INFO ABOUT MYSELF | WHO MADE ME | | | Shows the name of the fixture’s manufacturer. |
| | MY NAME IS | | | Shows the fixture’s name given by the manufacturer. |
| | YOU CALL ME | | | Shows the fixture’s name given by the user. |
| | MY ID IS | | | Shows the fixture’s RDM unique ID number. |
| | MY VERSION IS | | | Shows actual firmware version |
| | I WORKED HARD FOR | | | It Shows time the fixture has been turned on |

**RED values are editable.**

# FIRMWARE UPDATE

# DMX CHART

# PHOTOMETRICS

## MAIN SOURCE

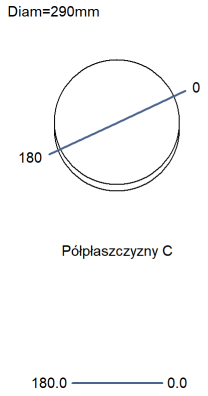


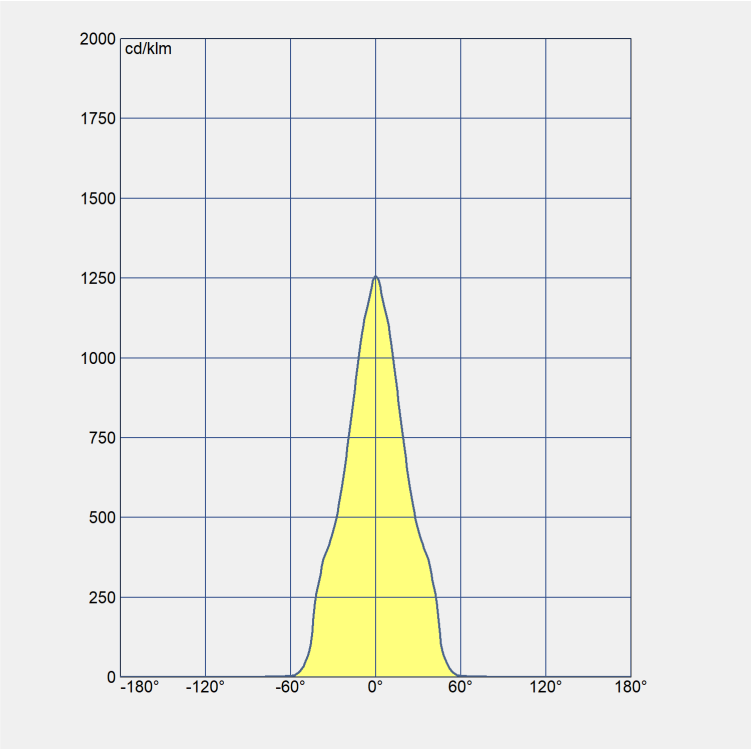

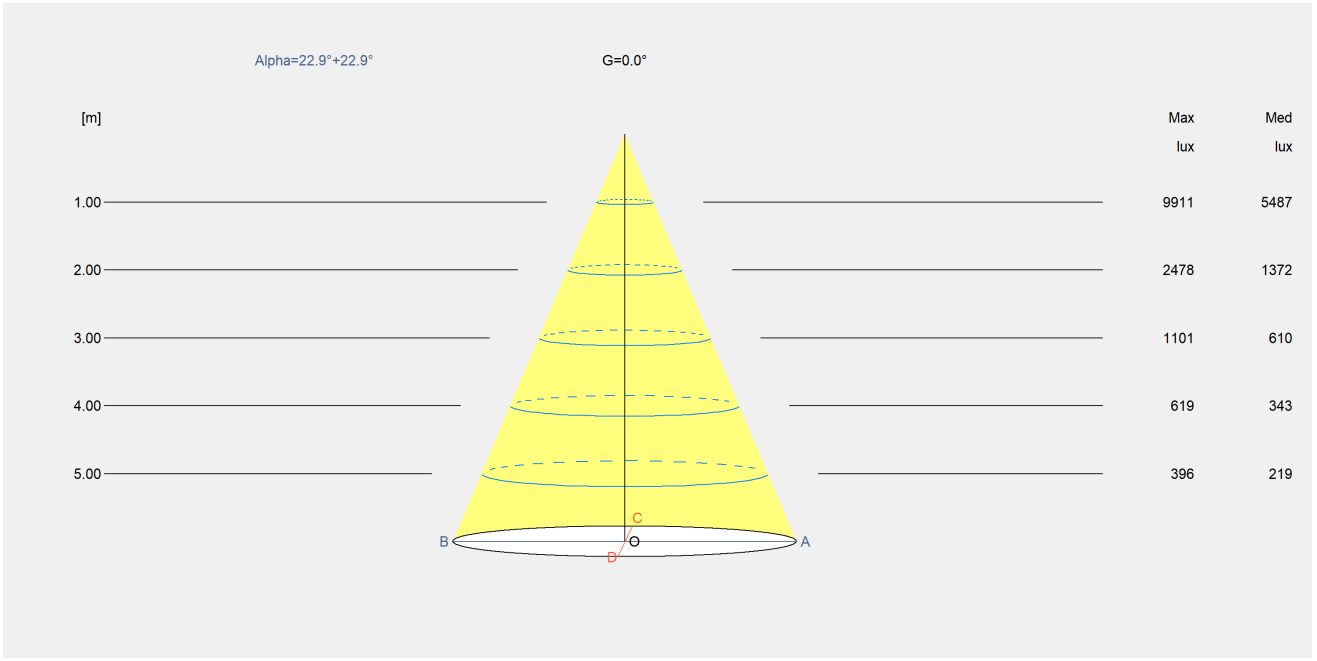


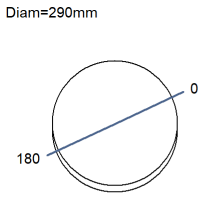


Półpłaszczyzny C




Strumień 7892 lm
Maksymalny 1255.83 cd/klm
Pozycja C=0.00 G=0.00
Wydajność: 100.00%
Data: 13-02-2024
Obrotosymetryvzny

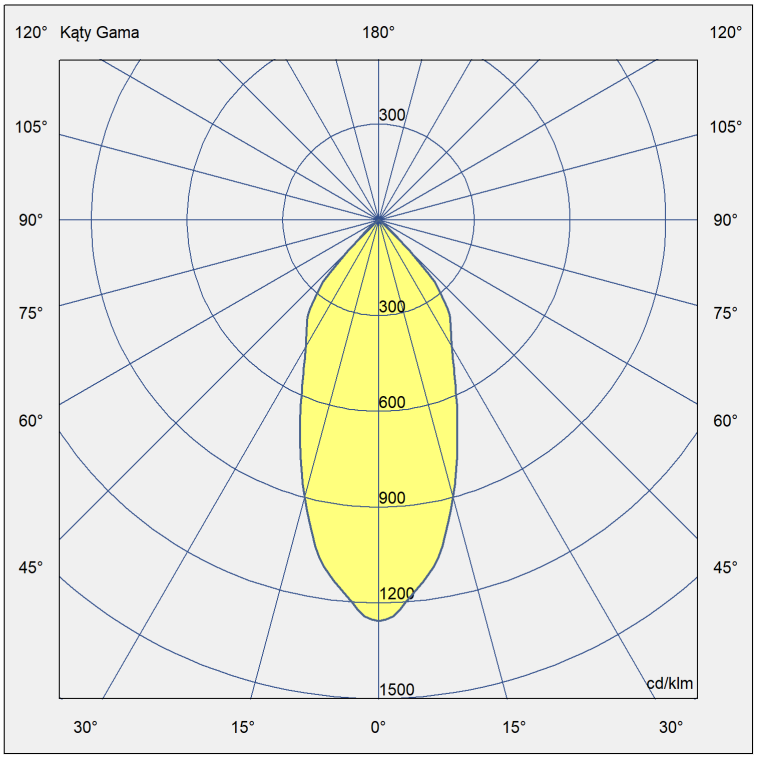


# NARROW SOURCE

Diam=290mm

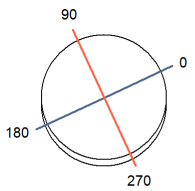


Półpłaszczyzny C

180.0 —— 0.0

270.0 —— 90.0

Strumień 213 lm
Maksymalny 216126.00 cd/klm
Pozycja C=0.00 G=0.00
Wydajność: 100.00%
Data: 11-02-2024
Podwójna symetria

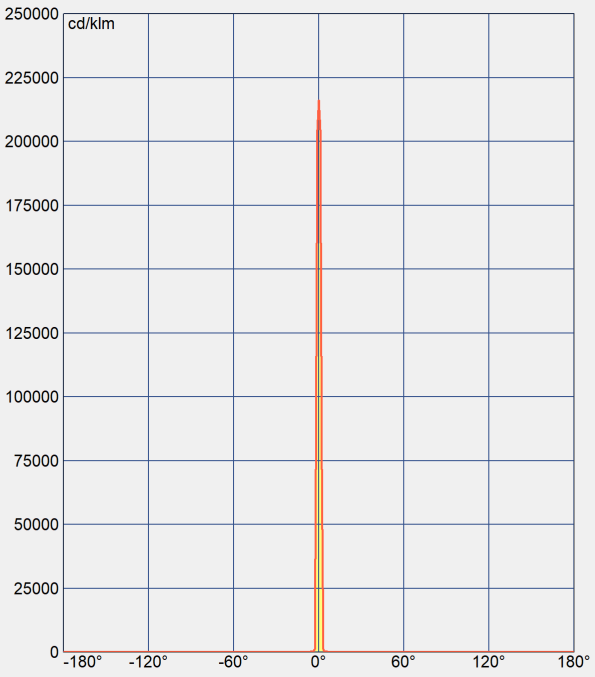


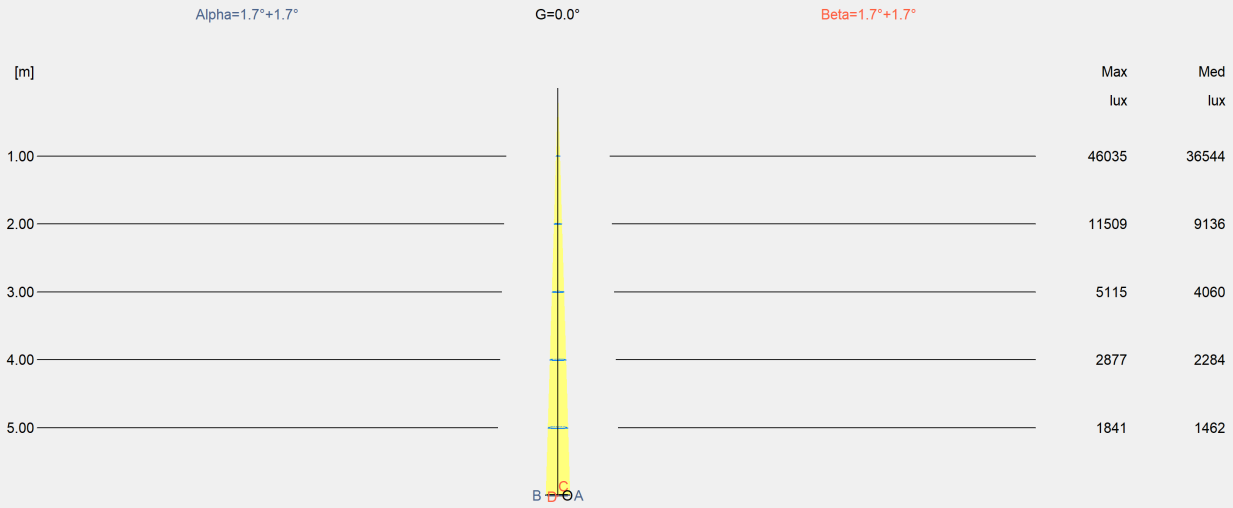


https://support.portmanlights.com/portal/en/kb/articles/user-manual-omniray

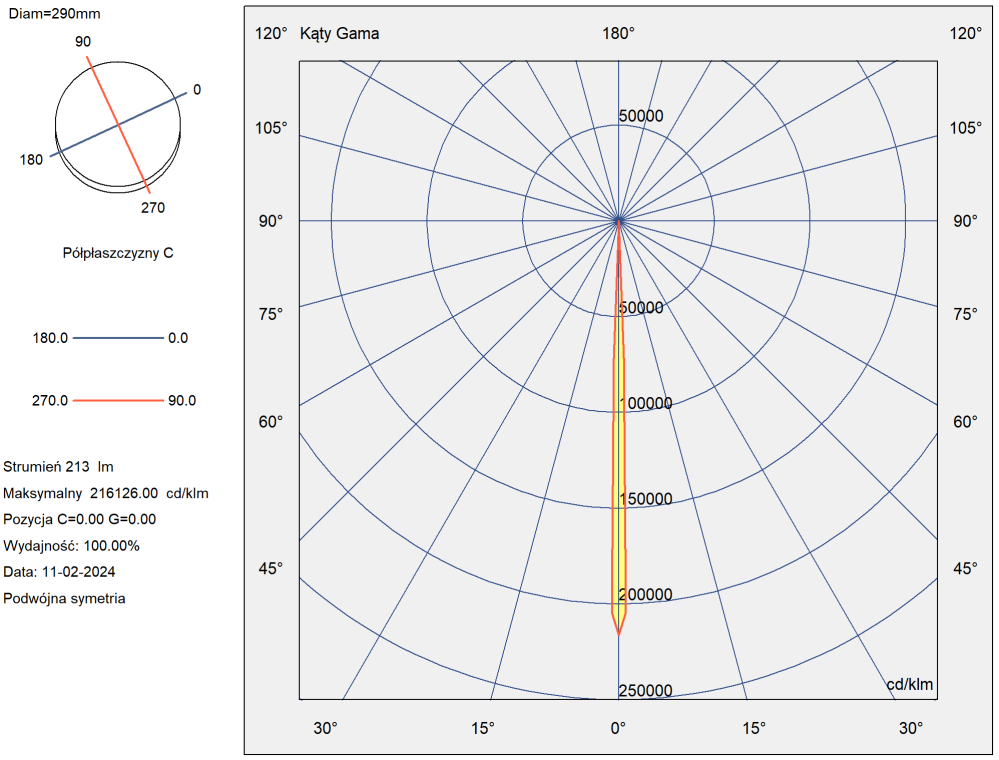


## Thank you for buying original products!

**By buying original products you buy the real quality but also support creativity and progress in the industry.**

Any problem and/or question according to fixtures – contact us following these steps:

**1. Send a message here:**

support@portmanlights.com

Remember to add these important details:
[Serial number of the fixture]
[Issue description, videos, pictures]

**2. Continue using a ticket number**

You will receive an automatic ticket number. Our Support team has up to 48h to start resolving the issue. You may be asked for more details by our support team or by a distributor. Always use your ticket number for

quicker resolution of the case.

© 2016-2025 Portman Lights Sp. z o. o. All rights reserved.

The information and specifications are subject to change without notice.

Portman Lights Sp. z o. o. disclaims liability for any injury, damage, direct or indirect loss, consequential or economic loss or any other loss occasioned by the use of, inability to use or reliance on the information contained in this user manual